POWTRAN

PI550-E Series

PMSM special used inverter

User guide

POWTRAN

AC Drives

www. powtran. com

Foreword

Thank you for choosing POWTRAN PI550-E Series Frequency Inverter. This product made by POWTRAN is based on years of experience in professional production and sale, and designed for controlling and adjusting the speed and torque of three-phase ac synchronous motor.

For any problem when using this product, please contact your local dealer authorized by this company or directly contact this company, our professionals are happy to serve you.

The end-users should hold this manual, and keep it well for future maintenance & care, and other application occasions. For any problem within the warranty period, please fill out the warranty card and fax it to the our authorized dealer.

The contents of this manual are subject to change without prior notice. To obtain the latest information, please visit our website.

For more product information, please visit: https:// www.powtran.com.

Contents

Chapter 1.Inspection and safety precautions 1
1-1. Inspection after unpacking 1
1-1-1. Instructions on nameplate 1
1-1-2. Model designation 1
1-2. Safety precautions 2
1-3. Precautions 3
1-4. Scope of applications 5

Chapter 2 Standard specifications 6
2-1. Technical specifications 6
2-2. Screw specification of Main loop 8
2-3. Standard specifications 10

Chapter 3 Keyboard 13
3-1. Keyboard description 13
3-2. Keyboard indicators 13
3-3. Description of operation panel keys 14
3-4. Keyboard display letters and numbers correspondence table 14
3-5. Example of parameter settings 15
3-5-1. Instructions on viewing and modifying function code 15
3-5-2. The way to read parameters in various status 16
3-5-3. Password settings 16
3-5-4. Motor parameter auto tuning 16

Chapter 4 Installation and commissioning 17
4-1. Installation direction and space 17
4-2. Wiring Diagram 18
4-3. Main circuit terminal 20
4-3-1. Arrangement of main circuit terminals 20
4-3-2. Function description of main circuit terminal 23
4-4. Control circuit terminals 24
4-4-1 Control circuit terminals arrangement 24
4-4-2 Description of control circuit terminals 24
4-4-3 Signal input terminal wiring diagram 26
4-5. Wiring Precautions 27
4-6. Commissioning 29

Chapter 5 Function parameter 30
5-1. Menu grouping 30
5-1-1. d0 Group - Monitoring function group 31
5-1-2. F0 Group - Basic function group 32
5-1-3. F1 Group- Input terminals group 34
5-1-4. F2 Group - Output terminals group 36
5-1-5. F3Group - Start and stop control group 37
5-1-6. F5 Group - Vector control parameters 37

5-1-7. F6 Group - Keyboard and display 38
5-1-8. F7 Group - Auxiliary function group 39
5-1-9. F8 Group - Fault and protection 43
5-1-10. F9 Group - Communication parameter 45
5-1-11. FA roup - Torque control parameters 46
5-1-12. Fb Group - Control optimization parameters 46
5-1-13. FC Group - Extended parameter group 47
5-1-14. E0 Group - Wobbulate, fixed-length and counting 47
5-1-15. E1 Group, Multi-speed, Simple PLC 48
5-1-16. E2 Group - PID function 50
5-1-17. E3 Group – Virtual DI,Virtual DO 51
5-1-18. b0 Group -Motor parameters 52
5-1-19. y0 Group - Function code management 54
5-1-20. y1 Group -Fault query 54
5-2. Function parameter description 56
5-2-1.Basic monitoring parameters: d0.00-d0.41 56
5-2-2.Basic function group: F0.00-F0.27 59
5-2-3.Input terminal: F1.00-F1.46 65
5-2-4.Output terminal group: F2.00-F2.19 73
5-2-5.Start and stop control group: F3.00-F3.15 77
5-2-6.Vector control parameters: F5.00-F5.48 78
5-2-7.Keyboard and display: F6.00-F6.19 82
5-2-8.Auxiliary function: F7.00-F7.54 85
5-2-9.Fault and protection:F8.00-F8.35 92
5-2-10.Communication parameter: F9.00-F9.07 97
5-2-11.Torque control parameters FA.00-FA.07 98
5-2-12.Control optimization parameters: Fb.00-Fb.09 99
5-2-13.Extended parameter: FC.00-FC.02 100
5-2-14.Wobbulate, fixed-length and counting:E0.00-E0.09 100
5-2-15.Multi-stage command, simple PLC: E1.00 - E1.51 102
5-2-16.PID function: E2.00-E2.27 105
5-2-17.Virtual DI,Virtual DO: E3.00 - E3.21 108
5-2-18.Motor parameters: b0.00-b0.35 110
5-2-19.Function code management: y0.00-y0.04 113
5-2-20.Fault query:y1.00-y1.30 114

Chapter 6 Troubleshooting 117

6-1. Fault alarm and countermeasures 117
6-2. EMC (Electromagnetic Compatibility) 121
6-2-1. Definition 121
6-2-2. EMC standard 122
6-3. EMC directive 122
6-3-1.Harmonic effect 122
6-3-2.Electromagnetic interference and installation precautions 122
6-3-3.Remedies for the interference from the surrounding electromagnetic equipment to the inverter 122
6-3-4.Remedies for the interference from the inverter to the surrounding electromagnetic equipment 123
6-3-5.Remedies for leakage current 123

6-3-6.Precautions on installing EMC input filter at the input end of power supply 123

Chapter 7 Dimension 124

7-1. Dimension 124

7-1-1.Product outside drawing, installation size 124

7-1-2.Product outline dimension and installation dimension 124

7-1-3.Keypad dimension drawing 132

Chapter 8 Maintenance and repair 134

8-1. Inspection and maintenance 134

8-2. Parts for regular replacement 134

8-3. Storage 135

8-4. Capacitor rebuilt 135

8-5. Measuring and readings 136

Chapter 9 Options 137

9-1. Expansion cards 137

9-2. AC input reactor 138

9-2-1. AC Input Reactor 138

9-3. AC output reactor 139

9-4. DC reactor 141

9-5. Input filter 142

9-6. Output filter 142

9-7. Brake unit and brake resistor 143

9-8. Main Circuit Breaker (MCCB), Contactor, Wire 146

Chapter 10 Warranty 149

Appendix I RS485 Communication protocol 150

I-1 Communication protocol 150

Appendix II How to use universal encoder expansion card 159

Appendix III CAN bus communication card use description 161

Appendix IV: Instruction of Profibus –DP communication card 162

Chapter 1.Inspection and safety precautions

POWTRAN frequency inverters have been tested and inspected before leaving factory. After purchasing, please check if its package is damaged due to careless transportation, and if the specifications and model of the product are consistent with your order requirements. For any problem, please contact your local authorized POWTRAN dealer or directly contact this company.

1-1.Inspection after unpacking

※ Check if that packing container contains this unit, one manual and one warranty card.

※ Check the nameplate on the side of the frequency inverter to ensure that the product you have received is right the one you ordered.

1-1-1.Instructions on nameplate

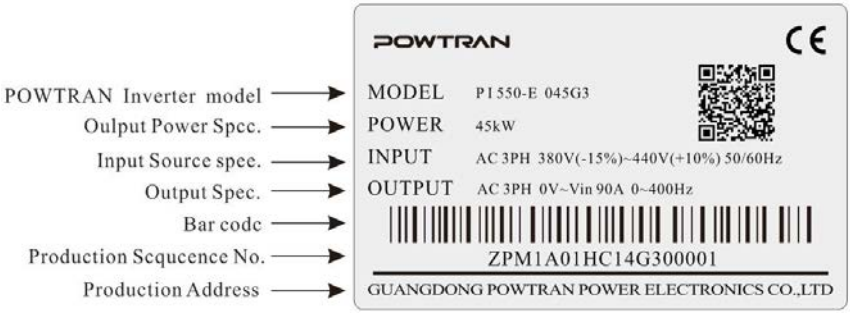

Figure1-1: Nameplate description

1-1-2.Model designation

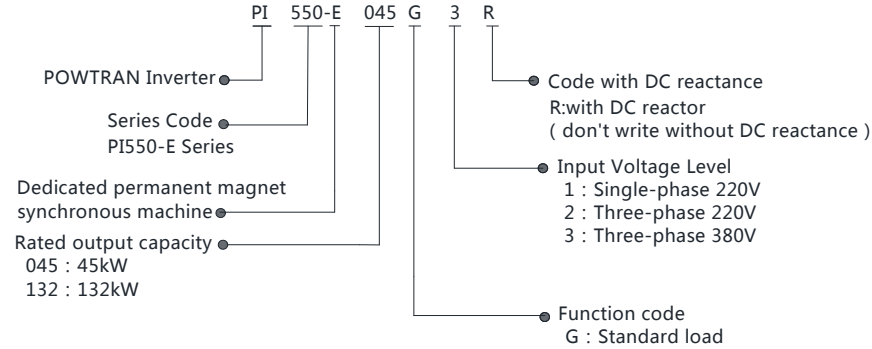

Figure 1-2: Model description

1-2.Safety precautions

Safety precautions in this manual are divided into the following two categories:

Danger: The dangers caused by failure to perform required operation, may result in serious injury or even death;

Caution:the dangers caused by failure to perform required operation, may result in moderate injury or minor injury, and equipment damage;

Process	Type	Explanation
Before installation	Danger	●When unpacking, if control system with water, parts missed or component damaged are found, do not install! ●If packing list does not match the real name, do not install !
	Note	●When carrying the inverter, be sure to hold on the housing. If grab the front cover, the main body of inverter may fall down and there is the risk of damage to the equipment. ●Gently carry with care, otherwise there is the risk of damage to equipment. ●Please do not use the damaged driver or the frequency inverter with missed pieces, otherwise there is the risk of injury. ●This device has passed the withstand voltage test before leaving factory,do not test any parts of the inverter . High voltage may lead to damage to the inverter insulation and internal parts.
When installing	Danger	●Do not modify the inverter .The modified inverter may has risk of electric shock . We shall not take any responsibility if your company or your customer has modified the product. ●Never twist the mounting bolts of the equipment components, especially the bolt with mark!
	Note	●Non-electrical construction professionals are not allowed to install, maintain, inspect or replace parts.Otherwise there is a risk of electric shock. ●Encoder must use the shielded wire, and the shielding layer must ensure the single-ended grounded! ●Do not install transformers or other devices that generate electromagnetic waves or interference around the inverter, otherwise it will lead to the wrong operation of the inverter . if need to install such kind of device , a shield plate shall be set between the device and the inverter .
When wiring	Danger	●Do not connect the wire when power on , otherwise there is a risk of electric shock. Please cut off the power of all equipment before checking. Even though the power is cut off , there is residual voltage in the internal capacitor. Please wait at least 10 minutes after power off. ●The contact current of inverter over than 3.5mA, please ensure the grounding of inverter is good . Otherwise there is a risk of electric shock.
	Note	●Please connect the output terminal U,V,W of inverter to the input terminal U,V,W of motor. Be sure the motor terminals and inverter terminals are in same phase sequence. If the phase sequence is different , it will cause the motor to rotate in reverse. ●Do not connect the power to the output terminal of inverter, otherwise it will damage the inverter , even cause fire. ●In some systems , the machine may start suddenly when power on, there is a risk of death or injury.

		●Before switching on the inverter power , please make sure the cover plate of inverter is firmly installed , and the motor is allowed to restart . Make sure the rated voltage of inverter is consistent with the power supply voltage. ●If the main circuit power voltage is used incorrectly, there will be a danger of fire. ●Do not connect the input power source to the output terminals (U,V,W) of inverter . Otherwise there is a risk of damage to inverter.
After energizing	**Danger**	● Do not open cover plate after energizing. Otherwise there is a risk of electric shock! ●Do not touch any input and output terminals of the inverter. Otherwise there is a risk of electric shock! ●Do not remove the cover of inverter or touch the printed circuit board when it is power on , otherwise there is a risk of electric shock!
	Note	●Please do not change the inverter manufacturer parameters. Otherwise it may cause damage to this unit! ●If you need to identify the parameters, please pay attention to the danger of injury during motor rotation. Otherwise it may cause an accident!
During operation	**Danger**	●Do not touch the cooling fan and the discharge resistor to feel the temperature. Otherwise it may cause burns! ●Non-professional personnel is not allowed to detect signal when operating. Doing so may cause personal injury or damage to this unit!
	Note	●When the inverter is operating, you should avoid that objects fall into this unit.Otherwise cause damage to this unit! ●Do not start/stop the driver by switching on/off contactor. Otherwise cause damage to this unit!
When maintaining	**Danger**	● Do not perform repairs and maintenance for the live electrical equipment. Otherwise there is a risk of electric shock! ● The repairs and maintenance task can be performed only when the inverter bus voltage is lower than 36V,Otherwise, the residual charge from capacitor would cause personal injury! ● Non-well-trained professional personnel is not allowed to perform repairs and maintenance of inverter. Doing this may cause personal injury or damage to this unit! ●After replacing the inverter, parameter settings must be redone, all pluggable plugs can be operated only in the case of powering off! ●Do not power on and operate the damaged inverter, otherwise it will enlarge the damage.

1-3.Precautions

No.	Type	Explanation
1	Motor insulation inspection	Please perform motor insulation inspection for the first time use, re-use after leaving unused for a long time as well as regular check, in order to prevent damage to the inverter because of the motor's winding insulation failure. Wiring between motor and inverter shall be disconnected, it is recommended that the 500V voltage type megger should be adopted and insulation resistance shall be not less than 5MΩ.
2	Motor thermal protection	If the rated capacity of the selected motor does not match the inverter, especially when the inverter rated power is greater than the motor rated power, be sure to adjust the motor protection parameter values inside inverter or install thermal relay in the front of motor for

		motor protection.
3	Run over power frequency	The inverter output frequency rang is 0Hz to 500Hz. If the user is required to run at 50Hz or more, please consider the endurance of your mechanical devices.
4	Vibrations of mechanical device	Inverter output frequency may be encountered mechanical resonance point of the load device, you can set jump frequency parameter inside inverter to avoid the case.
5	Motor heat and noise	The inverter output voltage is PWM wave that contains a certain amount of harmonics, so the temperature rise, noise and vibration of motor show a slight higher than frequency power frequency operation.
6	Output side with piezoresistor or capacitor for proving power factor	The inverter output is PWM wave, if the piezoresistor for lightning protection or the capacitor for improving power factor is installed in the output side, which easily cause the inverter instantaneous overcurrent or even cause damage to the inverter. Please do not use.
7	Contactor or switch used in the inverter input/output terminals	If contactor is installed between power supply and inverter, the contactor is not allowed to start/stop the inverter. Necessarily need to use the contactor to control the inverter start/stop, the interval should not be less than one hour. Frequent charging and discharging may reduce the service life of the inverter capacitor. If the contactor or switch is equipped between output terminals and motor, the inverter should be turned on/off without output status, otherwise which easily lead to damage to the inverter module.
8	Use other than the ratedvoltage	PI series inverter is not suitable for use beyond the allowable operating voltage described in this manual, which easily cause damage to the parts inside inverter. If necessary, please use the corresponding transformer to change voltage.
9	Never change 3-phase input to 2-phase input	Never change PI series 3-phase inverter to 2-phase one for application. Otherwise it will lead to malfunction or damage to the inverter.
10	Lightning surge protection	The series inverter is equipped with lightning overcurrent protection device, so it has the ability of self-protection to lightning induction. For the area where lightning is frequent, user should also install the extra protection in the front of the inverter.
11	High altitude and derating application	When the inverter is used in areas over 1000m altitude, it is required to reduce frequency because the thin air will decrease the cooling effect of inverter. Please consult our technician for details on the application.
12	Special use	If the user need to use methods other than the suggested wiring diagram provided in this manual, such as common DC bus, please consult our technician.
13	Precautions for scrap disposal of the inverter	When electrolytic capacitors on the main circuit and printed circuit board as well as plastic parts are burned, it may produce toxic gases.Please disposing as industrial waste.
14	Adaptive motor	1) Standard adaptive motor shall be permanent magnet synchronous motor , please select the inverter according to the motor rated current. 2) The cooling fan and the rotor shaft for non-inverter motor are coaxially connected, the fan cooling effect is reduced when the rotational speed is reduced, therefore, when the motor works in overheating occasions, a strong exhaust fan should be retrofitted or replace non-inverter motor with the inverter motor. 3) The inverter has built-in the adaptive motor standard parameters, according to the actual situation, please identify motor parameters or accordingly modify the default values to try to meet the actual value,

		otherwise it will operation affect and protection performance; 4) When short-circuit of cable or motor internal will activate the inverter alarm, even bombing. Therefore, firstly perform insulation short-circuit test for the initial installation of the motor and cable, routine maintenance often also need to perform such test. Note that the parts to be tested and the inverter shall be disconnected completely when testing.
15	Others	1)We need to fix cover and lock before power on, so as to avoid the harm to personal safety that is caused by internal injuries of bad capacitors and other components. 2)Do not touch internal circuit board and any parts after powering off and within five minutes after keyboard indicator lamp goes out, you must use the instrument to confirm that internal capacitor has been discharged fully, otherwise there is a danger of electric shock. 3)Body static electricity will seriously damage the internal MOS field-effect transistors, etc., if there are not anti-static measures, do not touch the printed circuit board and IGBT internal device with hand, otherwise it may cause a malfunction. 4)The ground terminal of the inverter(E or ⏚) shall be earthed firmly according to the provisions of the National Electrical Safety and other relevant standards. Do not shut down(power off) by pulling switch, and only cut off the power until the motor stopping operation. 5)It is required to add the optional input filter attachment so as to meet CE standards.

1-4.Scope of applications

※ This inverter is suitable for three-phase permanent magnet synchronous motor.

※ This inverter can only be used in those occasions recognized by this company, an unapproved use may result in fire, electric shock, explosion and other accidents.

※ If the inverter is used in such equipment (e.g: Equipment for lifting persons, aviation systems, safety equipment, etc.) and its malfunction may result in personal injury or even death. In this case, please consult the manufacturer for your application.

Only the well-trained personnel can be allowed to operate this unit, please carefully read the instre1tions on safety, installation, operation and maintenance before use. The safe operation of this unit depends on proper transport, installation, operation and maintenance!

Chapter 2 Standard specifications

2-1.Technical specifications

Model	Rated output power (kW)	Rated input current (A)	Rated output current (A)	Adaptive motor (kW)	Frame No.
AC 1PH 220V(-15%)～240V(+10%)					
PI550-E 0R7G1	0.75	8.2	4	0.75	A1
PI550-E 1R5G1	1.5	14	7	1.5	A2
PI550-E 2R2G1	2.2	23	9.6	2.2	A2
PI550-E 004G1	4	35	17	4	A3
PI550-E 5R5G1	5.5	50	25	5.5	A4
AC 3PH 220V(-15%)～240V(+10%)					
PI550-E 0R4G2	0.4	4.0	2.1	0.4	A1
PI550-E 0R7G2	0.75	5.3	3.8	0.75	A1
PI550-E 1R5G2	1.5	8.0	7	1.5	A1
PI550-E 2R2G2	2.2	11.8	9	2.2	A2
PI550-E 004G2	4	15	13	4	A3
PI550-E 5R5G2	5.5	28	25	5.5	A3
PI550-E 7R5G2	7.5	37.1	32	7.5	A4
PI550-E 011G2	11	49.8	45	11	A4
PI550-E 015G2	15	65.4	60	15	A5
PI550-E 018G2	18.5	81.6	75	18.5	A6
PI550-E 022G2	22	97.7	90	22	A7
PI550-E 030G2	30	122.1	110	30	A8
PI550-E 037G2	37	157.4	152	37	A8
PI550-E 045G2	45	185.3	176	45	A9
PI550-E 055G2	55	214	210	55	A9
PI550-E 075G2	75	307	304	75	A10
PI550-E 093G2	93	383	380	93	A11
PI550-E 110G2	110	428	426	110	A11
PI550-E 132G2	132	467	465	132	A12
PI550-E 160G2	160	587	585	160	A12
AC 3PH 380V(-15%)～440V(+10%)					
PI550-E 0R7G3	0.75	4.3	2.1	0.75	A1
PI550-E 1R5G3	1.5	5.0	3.8	1.5	A1
PI550-E 2R2G3	2.2	5.8	5.1	2.2	A1
PI550-E 004G3	4	10.5	9	4	A2
PI550-E 5R5G3	5.5	14.6	13	5.5	A3

PI550-E 7R5G3	7.5	20.5	17	7.5	A3
PI550-E 011G3	11	26	25	11	A3
PI550-E 015G3	15	35	32	15	A4
PI550-E 018G3	18.5	38.5	37	18.5	A4
PI550-E 022G3	22	46.5	45	22	A4
PI550-E 030G3	30	62	60	30	A5
PI550-E 037G3	37	76	75	37	A6
PI550-E 045G3	45	91	90	45	A6
PI550-E 055G3	55	112	110	55	A7
PI550-E 075G3	75	157	152	75	A8
PI550-E 090G3	90	180	176	93	A9
PI550-E 110G3	110	214	210	110	A9
PI550-E 132G3	132	256	253	132	A9
PI550-E 160G3	160	307	304	160	A10
PI550-E 200G3	200	385	380	200	A11
PI550-E 220G3	220	430	426	220	A11
PI550-E 250G3	250	468	465	250	A12
PI550-E 280G3	280	525	520	280	A12
PI550-E 315G3	315	590	585	315	A13
PI550-E 355G3	355	665	650	355	A13
PI550-E 400G3	400	785	725	400	A13
PI550-E 450G3	450	883	820	450	A13
AC 3PH 480V±10%					
PI550-E 0R7G4	0.75	4.1	2.5	0.75	A1
PI550-E 1R5G4	1.5	4.9	3.7	1.5	A1
PI550-E 2R2G4	2.2	5.7	5.0	2.2	A1
PI550-E 004G4	4	9.4	8	4	A2
PI550-E 5R5G4	5.5	12.5	11	5.5	A3
PI550-E 7R5G4	7.5	18.3	15	7.5	A3
PI550-E 011G4	11	23.1	22	11	A3
PI550-E 015G4	15	29.8	27	15	A4
PI550-E 018G4	18.5	35.7	34	18.5	A4
PI550-E 022G4	22	41.7	40	22	A4
PI550-E 030G4	30	57.4	55	30	A5
PI550-E 037G4	37	66.5	65	37	A6
PI550-E 045G4	45	81.7	80	45	A6
PI550-E 055G4	55	101.9	100	55	A7
PI550-E 075G4	75	137.4	130	75	A8
PI550-E 093G4	93	151.8	147	93	A9
PI550-E 110G4	110	185.3	180	110	A9

PI550-E 132G4	132	220.7	216	132	A9
PI550-E 160G4	160	264.2	259	160	A10
PI550-E 200G4	200	334.4	328	200	A11
PI550-E 220G4	220	363.9	358	220	A11
PI550-E 250G4	250	407.9	400	250	A12
PI550-E 280G4	280	457.4	449	280	A12
PI550-E 315G4	315	533.2	516	315	A13
PI550-E 355G4	355	623.3	570	355	A13
PI550-E 400G4	400	706.9	650	400	A13
PI550-E 450G4	450	750	700	450	A13
AC 3PH 690V±10%					
PI550-E 055G6	55	70	62	55	A7
PI550-E 075G6	75	90	85	75	A8
PI550-E 093G6	93	105	102	93	A9
PI550-E 110G6	110	130	125	110	A9
PI550-E 132G6	132	170	150	132	A9
PI550-E 160G6	160	200	175	160	A10
PI550-E 200G6	200	235	215	200	A11
PI550-E 220G6	220	247	245	220	A11
PI550-E 250G6	250	265	260	250	A12
PI550-E 280G6	280	305	299	280	A12
PI550-E 315G6	315	350	330	315	A13
PI550-E 355G6	355	382	374	355	A13
PI550-E 400G6	400	435	410	400	A13

Note:

Correct selection method of inverter is : inverter rated output current , motor rated current , and consider the overload capacity.Usually rated power difference between inverter and motor is recommended not exceed 2 power segments .When use big inverter to drive small motor , motor parameters must be input correctly to avoid of damage which caused by motor overload.

2-2.Screw specification of Main loop

Model	Screw specification	Fastening torque（Nm）
PI550-E 0R7G1	M3	0.5～0.7
PI550-E 0R7G2	M3	0.5～0.7
PI550-E 0R7G3	M3	0.5～0.7
PI550-E 1R5G2	M3	0.5～0.7
PI550-E 1R5G3	M3	0.5～0.7
PI550-E 2R2G3	M3	0.5～0.7
PI550-E 1R5G1	M3	0.5～0.7
PI550-E 2R2G1	M3	0.5～0.7
PI550-E 2R2G2	M3	0.5～0.7

PI550-E 004G3	M3	0.5～0.7
PI550-E 004G1	M4	1.2～1.5
PI550-E 004G2	M4	1.2～1.5
PI550-E 5R5G2	M4	1.2～1.5
PI550-E 5R5G3	M4	1.2～1.5
PI550-E 7R5G3	M4	1.2～1.5
PI550-E 011G3	M4	1.2～1.5
PI550-E 5R5G1	M5	2～2.5
PI550-E 7R5G2	M5	2～2.5
PI550-E 015G3	M5	2~2.5
PI550-E 011G2	M5	2~2.5
PI550-E 018G3	M5	2~2.5
PI550-E 022G3	M5	2~2.5
PI550-E 015G2	M6	4~6
PI550-E 018G2	M6	4~6
PI550-E 030G3	M6	4~6
PI550-E 037G3	M6	4~6
PI550-E 022G2	M8	9~11
PI550-E 030G2	M8	9~11
PI550-E 037G2	M8	9~11
PI550-E 045G3	M8	9~11
PI550-E 055G3	M8	9~11
PI550-E 075G3	M8	9~11
PI550-E 045G2	M10	18~23
PI550-E 055G2	M10	18~23
PI550-E 090G3	M10	18~23
PI550-E 110G3	M10	18~23
PI550-E 075G2	M10	18~23
PI550-E 132G3	M10	18~23
PI550-E 160G3	M10	18~23
PI550-E 200G3	M10	18~23
PI550-E 220G3	M10	18~23
PI550-E 250G3	M12	32~40
PI550-E 280G3	M12	32~40
PI550-E 315G3	M12	32~40
PI550-E 355G3	M12	32~40
PI550-E 400G3	M12	32~40
PI550-E 450G3	M12	32~40

2-3.Standard specifications

Items		Specifications	
Power Input	Rated voltage	AC 1PH 220V(-15%)～240V(+10%) AC 3PH 220V(-15%)～240V(+10%) AC 3PH 380V(-15%)～440V(+10%)	
	Input frequency	50Hz/60Hz	
	Allowing fluctuations	Voltage continued volatility: ±10%	Less than 3% of voltage unbalance rate 3%;
		Input frequency fluctuation: ±5%;	Distortion satisfy IEC61800-2 standard
Control system	Control system	High performance vector control inverter based on DSP	
	Control method	V/F control(for factory debugging use),vector control W/O PG,vector control W/PG	
	Acceleration/deceleration control	Straight or S-curve mode. Four times available and time range is 0.0 to 6500.0s.	
	Over load capability	G type:rated current 150%－1min, rated current 180%－2s;	
	Maximum frequency	1,Vector control: 0～500Hz;	
	Carrier Frequency	2～16kHz;automatically adjust carrier frequency according to the load characteristics.	
	Input frequency resolution	Digital setting: 0.01Hz Minimum analog: 0.01Hz	
	Start torque	Vector control W/O PG: 2% rated speed 100% rated torque Vector control W/PG: 0Hz/180% rated torque	
	Speed range	1: 50(vector control W/O PG)1:1000(vector control W/PG)	
	Steady-speed precision	Vector control W/O PG: ≤ ± 0.1% (Rated synchronous speed) Vector control W/ PG: ≤ ± 0.02% (Rated synchronous speed)	
	Torque response	≤ 20ms (vector control W/O PG)	
	Jogging control	Jog Frequency Range: 0.00Hz to max. frequency; Jog Ac/deceleration time: 0.0s to 6500.0s	
	Multi-speed operation	Achieve up to 16-speed operation through the control terminal	
	Built-in PID	Easy to realize closed-loop control system for the process control.	
	Automatic voltage regulation(AVR)	Automatically maintain a constant output voltage when the voltage of electricity grid changes	
	Torque limit and control	"Excavator" feature - torque is automatically limited during the operation to prevent frequent overcurrent trip; the closed-loop vector mode is used to control torque.	
Personalization function	Self-inspection of peripherals after power-on	After powering on, peripheral equipment will perform safety testing, such as ground, short circuit, etc.	
	Quick current limiting	The current limiting algorithm is used to reduce the inverter over current probability, and improve whole unit anti-interference capability.	
	Timing control	Timing control function: Time setting range(0m to 6500min)	

Items			Specifications
Running	Input signal	Running method	Keyboard/terminal/communication
		Frequency setting	10 frequency settings available, including adjustable DC(0 to 10V), adjustable DC(0 to 20mA), panel potentiometer, etc.
		Start signal	Rotate forward/reverse
		Multi-speed	At most 16-speed can be set(run by using the multi-function terminals or program)
		Emergency stop	Interrupt controller output
		Wobbulate run	Process control run
		Fault reset	When the protection function is active, you can automatically or manually reset the fault condition.
		PID feedback signal	Including DC(0 to 10V), DC(0 to 20mA)
	Output Signal	Running status	Motor status display, stop, ac/deceleration, constant speed, program running status.
		Fault output	Contact capacity :Normally closed contact 3A/AC 250V,normally open contact5A/AC 250V,1A/DC 30V.
		Analog output	Two-way analog output, 16 signals can be selected such as frequency, current, voltage and other, output signal range (0 to 10V / 0 to 20mA).
		Output signal	At most 4-way output, there are 40 signals each way
	Run function		Limit frequency, jump frequency, frequency compensation, auto-tuning, PID control
	Running command channel		Three channels: Operation panel, control terminals and serial communication port. They can be switched through a variety of ways.
	Frequency source		Total 10 frequency sources: Digital, analog voltage, analog current, multi-speed and serial port. They can be switched through a variety of ways.
	Input terminals		8 digital input terminals, compatible with active PNP or NPN input mode, one of them can be for high-speed pulse input(0 to 100 kHz square wave); 3 analog input terminals for voltage or current input.
	Output terminals		2 digital output terminals, one of them can be for high-speed pulse output(0 to 100kHz square wave); one relay output terminal; 2 analog output terminals respectively for optional range (0 to 20mA or 0 to 10V), they can be used to set frequency, output frequency, speed and other physical parameters.
Protection function	Inverter protection		Overvoltage protection, undervoltage protection, overcurrent protection, overload protection, overheat protection, overcurrent stall protection, overvoltage stall protection, losting-phase protection (optional), communication error, PID feedback signal abnormalities, PG failure and short circuit to ground protection.
	IGBT temperature display		Displays current temperature IGBT

Items			Specifications
	Inverter fan control		Can be set
	Parameter protection function		Protect inverter parameters by setting administrator Password and decoding
Display	LED/OLED display keyboard	Running information	Monitoring objects including: Running frequency, set frequency, bus voltage, output voltage, output current, output power, output torque, input terminal status, output terminal status, analog AI1 value, analog AI2 value, motor Actual running speed,PID set value percentage, PID feedback value percentage.
		Error message	At most save three error message, and the time, type, voltage, current, frequency and work status can be queried when the failure is occurred.
	LED display		Display parameters
	OLED display		Optional, prompts operation content in Chinese/English text.
	Copy parameter		Can upload and download function code information of frequency converter, rapid replication parameters.
	Key lock and function selection		Lock part or all of keys, define the function scope of some keys to prevent misuse.
Communication	RS485		Built-in 485
Environment Product standard	Environment temperature		-10℃to 40℃ (temperature at 40 ℃to 50℃, please derating for use)
	Storage temperature		-20 ℃ to 65 ℃
	Environment humidity		Less than 90% R.H, no condensation.
	Vibration		Below 5.9m/s² (= 0.6g)
	Application sites		Indoor where no sunlight or corrosive, explosive gas and water vapor, dust, flammable gas,oil mist, water vapor, drip or salt, etc.
	Altitude		It is normally used when altitude less than 1000m. For areas over 1000m , please derate 1% per 100m
	Pollution degree		2
	Protection level		IP20
Product standard	Product adopts safety standards.		IEC61800-5-1:2007
	Product adopts EMC standards.		IEC61800-3:2005
Cooling method			Forced air cooling

Chapter 3 Keyboard

3-1.Keyboard description

Figure 3-1: Operation panel display

3-2.Keyboard indicators

Indicator flag		Name
Status lamp	RUN	Running indicator light * ON: The inverter is working * OFF: The inverter stops
	LOCAL/ REMOTE	Command indicator light That is the indicator for keyboard operation, terminal operation and remote operation (Communication control) * ON: Terminal control working status * OFF: keyboard control working status * Flashing: Remote control working status
	FWD/REV	Forward/reverse running light * ON: in forward status * OFF: in reversal status
	TUNE/TC	Motor self-learning/Torque control/Fault indicator * ON: in torque control mode * Slow flashing: in the motor tunning status * Quick flashing: in the fault status
Units combination indicator	HzAV	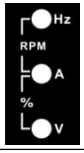

Hz	frequency unit
A	current unit
V	voltage unit
RPM	speed unit
%	percentage

3-3.Description of operation panel keys

Sign	Name	Function
PRG	Parameter Setting/Esc Key	* Enter into the modified status of main menu * Esc from functional parameter modification * Esc submenu or functional menu to status menu
>> SHIFT	Shift Key	*Choose displayed parameter circularly under running or stop interface; choose parameter's modified position when modify parameter
▲	Increasing Key	Parameter or function number increasing,set by parameter F6.18.
▼	Decreasing key	Parameter or function number decreasing, set by parameter F6.19.
RUN	Running key	For starting running in the mode of keyboard control status
STOP RST	Stop/Reset Key	*For stopping running in the running status; for resetting the operation in fault alarm status. The function of the key is subject to F6.00
ENTER	Enter key	*Step by step into the menu screen, confirm the parameter setting
QUICK	Quick multifunction key	This key function is determined by the function code F6.21.
	Keyboard encoder	* In query status, function parameter increasing or decreasing * In modified status, the function parameter or modified position increasing or decreasing. * In monitoring status, frequency setting increasing or decreasing

3-4.Keyboard display letters and numbers correspondence table

	Display letters	Corresponding letters	Display letters	Corresponding letters	Display letters	Corresponding letters
Digital display area	0	0	1	1	2	2
	3	3	4	4	5	5
	6	6	7	7	8	8
	9	9	A	A	b	B
	C	C	d	d	E	E
	F	F	H	H	I	I
	L	L	n	N	n	n
	o	o	P	P	r	r
	S	S	t	t	U	U
	T	T	.	.	_	-
	y	y				

3-5.Example of parameter settings

3-5-1.Instructions on viewing and modifying function code

PI550-E inverter's operation pane is three levels menu for parameter setting etc.Three levels: Function parameter group (Level 1)→function code(level 2)→function code setting(level 3). The operation is as following:

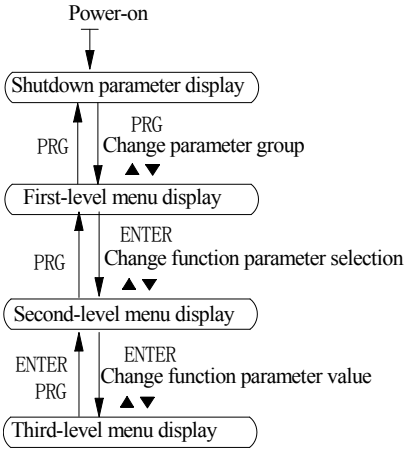

Figure 3-2: Operation processes

Description: Back to the level 2 menu from level 3 menu by PRG key or ENTER key in the level 3 operation status. The differences between the two keys : ENTER will be back to the level 2 menu and save parameter setting before back, and transfer to the next function code automatically; PRG will be back to the level 2 menu directly, not save parameter setting, then back to current function code.

Example 1 Frequency setting to modify parameters

Set F0.01 from 50.00Hz to 40.00Hz

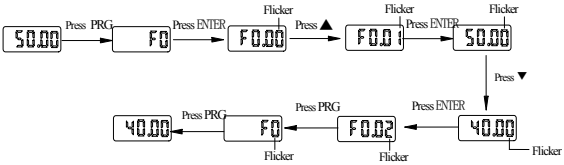

Example 2 :Restore factory settings

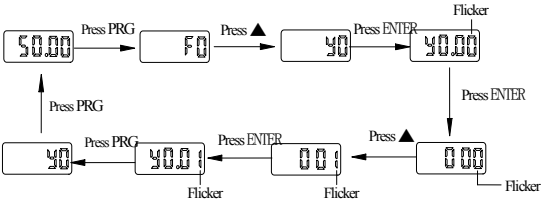

Without twinkling parameter position, the function code can not be modified in the level 3 menu. The reason maybe as following:

1) The function code can not be modified itself, eg: Actual detecting parameters, running record parameters.

2) The function code can not be modified in the running status. It must be modified in the stop status.

3-5-2.The way to read parameters in various status

In stop or run status, operate shift key SHIFT to display a variety of status parameters respectively. Parameter display selection depends on function code F6.01 (run parameter 1), F6.02 (run parameter 2) and F6.03 (stop parameter 3).

In stop status, there are total 16 stop status parameters that can be set to display/not display: Set frequency, bus voltage, DI input status, DO output status, analog input AI1 voltage, analog input AI2 voltage, panel potentiometer input voltage, Actual count value, Actual length value, PLC running step number, Actual speed display, PID settings, high-speed pulse input frequency and reserve, switch and display the selected parameter by pressing key orderly.

In running status, there are 5 running-status parameters:running frequency,setting frequency,bus voltage,output voltage, output current default display, and other display parameters: Output power, output torque, DI input status, DO output status, analog input AI1 voltage, analog input AI2 voltage, panel potentiometer input voltage, Actual count value, Actual length value, linear speed, PID settings and PID feedback, etc, their display depends on function code F6.01 and F6.02 switch and display the selected parameter by pressing key orderly.

Inverter powers off and then powers on again, the displayed parameters are the selected parameters before power-off.

3-5-3.Password settings

The inverter has password protection. When y0.01 become not zero, it is the password and will be work after exit from function code modified status. Press PRG key again, will display”----”. One must input the correct password to go to regular menu, otherwise, inaccessible.

To cancel the password protection function, firstly enter correct password to access and then set y0.01 to 0.

3-5-4.Motor parameter auto tuning

Choose vector control, one must input the motor’s parameters in the nameplate accurately before running the inverter. PI550-Eseries frequency inverter will match the motor’s standard parameters according to its nameplate. The vector control is highly depend on motor’s parameters. The parameters of the controlled motor must be inputted accurately for the good control performance.

Motor parameter auto tuning steps are as follows:

Firstly select command source (F0.11=0) as the comment channel for operation panel, then input the following parameters according to the actual motor parameters (selection is based on the current motor):

Motor Selection	Parameters	
Motor	b0.00:motor type selection	b0.03:motor rated current
	b0.01:motor rated power	b0.04:motor rated frequency
	b0.02:motor rated voltage	b0.05: Motor rated speed

If the motor can NOT completely disengage its load, please select 11 (synchronous motor parameter static auto tuning) for b0.27, and then press the RUN key on the keyboard panel.

If the motor can completely disengage its load, please select 12 (synchronous motor parameter comprehensive auto turning) for b0.27, and then press the RUN key on the keyboard panel, the inverter will automatically calculate the motor’s following parameters:

Motor Selection	Parameters
Motor	b0.16:Synchronous motor stator resistance b0.17: Synchronous motor D axis inductance b0.18:Synchronous motor Q axis inductance b0.20: Opposing electromotive force coefficient of synchronous motor

Complete motor parameter auto tuning.

Chapter 4 Installation and commissioning

4-1.Installation direction and space

PI550-E series inverter according to different power rating, the requirements of around installation reserve space is different , specifically as shown below :

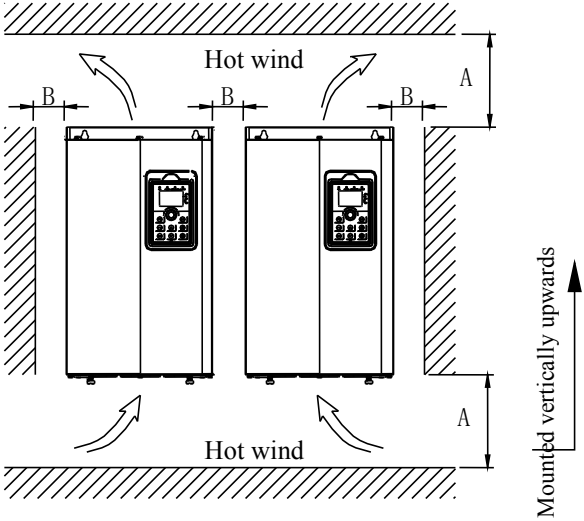

Power rating	Dimension requirement
0.75～11kW	A≥100mm;B≥10mm
15～22kW	A≥200mm;B≥10mm
30～75kW	A≥200mm;B≥50mm
90～450kW	A≥300mm;B≥50mm

Figure 4-1: PI550-E series each power level installation space requirement

PI550-E Series frequency inverter heat radiator circulated from bottom to top, when more than one inverter work together, usually mounted side by side. In the case of the need to install them by upper and lower rows, due to the heat of the lower inverters rising to the upper equipment, fault maybe caused, heat insulation deflector and other objects to be installed.

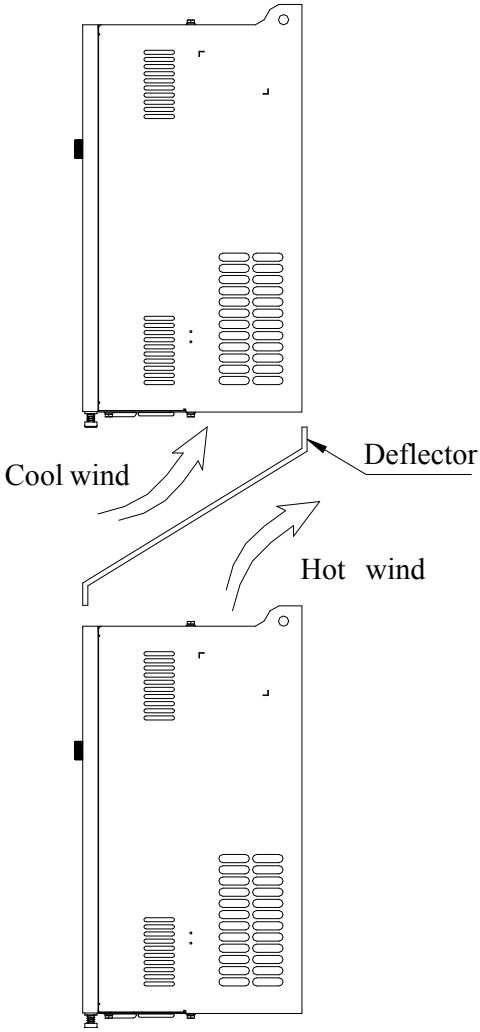

Figure 4-2: Heat insulation deflector up and down installation diagram

4-2.Wiring Diagram

Frequency inverter wiring is divided by main circuit and control circuit. Users must properly connect frequency inverter in accordance with the wiring connection diagram showing below.

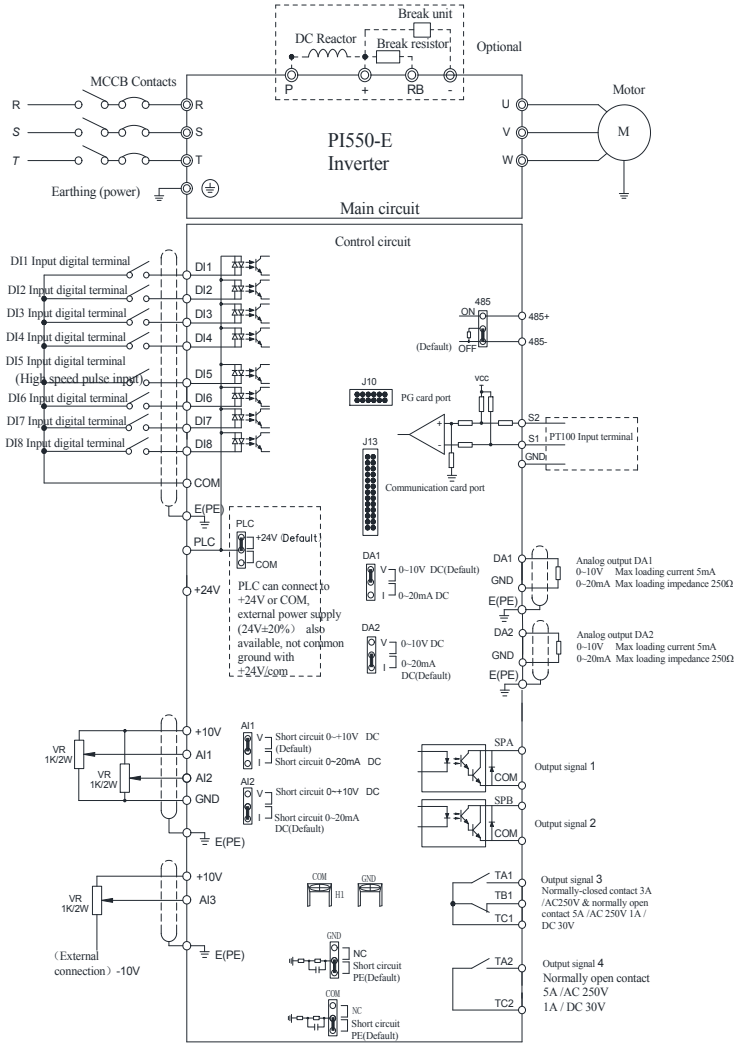

Figure 4-3: Wiring diagram

4-3.Main circuit terminal

4-3-1. Arrangement of main circuit terminals

1) 0.75～4kW G3 main circuit terminal (plastic shell)

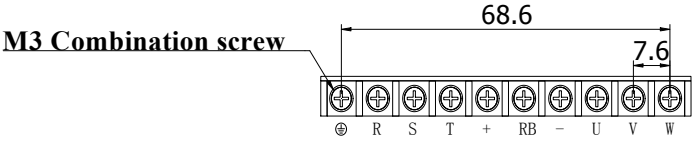

Figure 4-4: 0.75～4kW G3 main circuit terminal（Frame No.：A1～A2）

2）5.5～11kW G3 main circuit terminal (plastic shell)

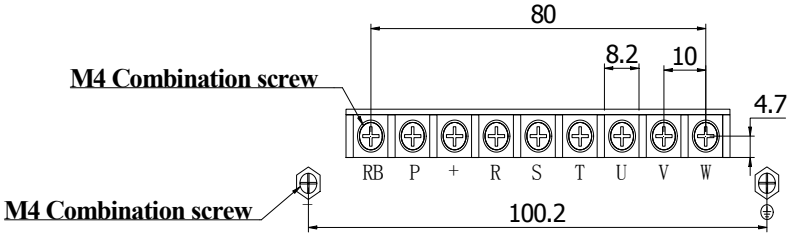

Figure 4-5: 5.5～11kW G3main circuit terminal（Frame No.：A3）

3) 15～22kW G3main circuit terminal（plastic shell）

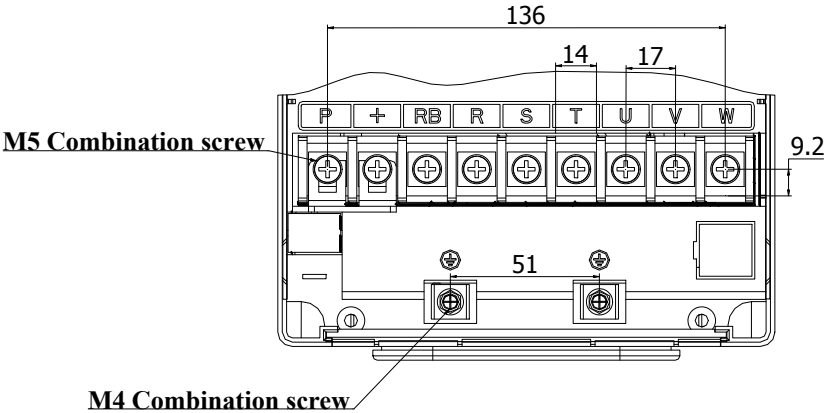

Figure 4-6: 15～22kW G3main circuit terminal（Frame No.：A4）

4) 30kW G3main circuit terminal

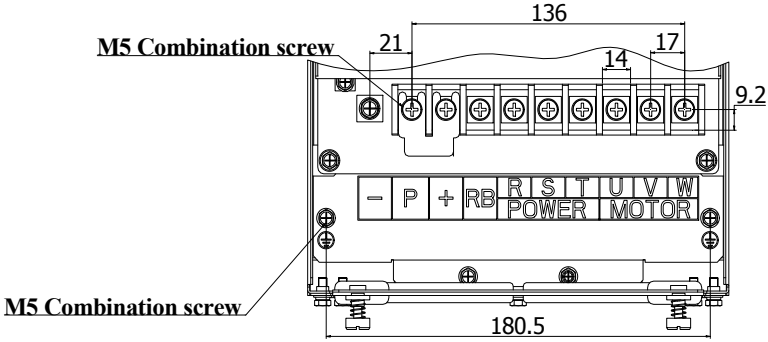

Figure 4-7: 30kW G3main circuit terminal（Frame No.：A5）

5) 37～45kW G3main circuit terminal

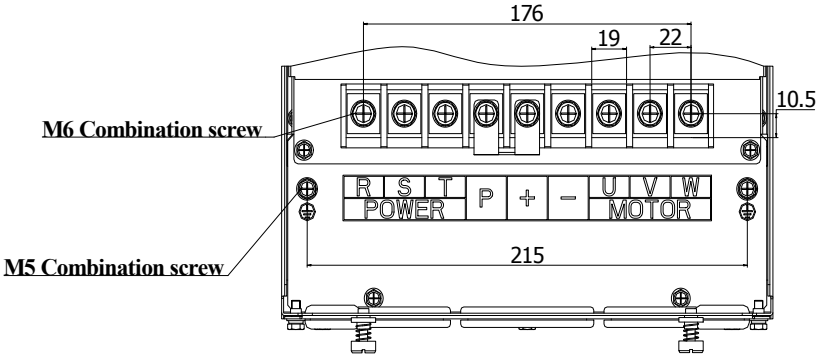

Figure 4-8: 37～45kW G3main circuit terminal（Frame No.：A6）

6) 55kW G3main circuit terminal

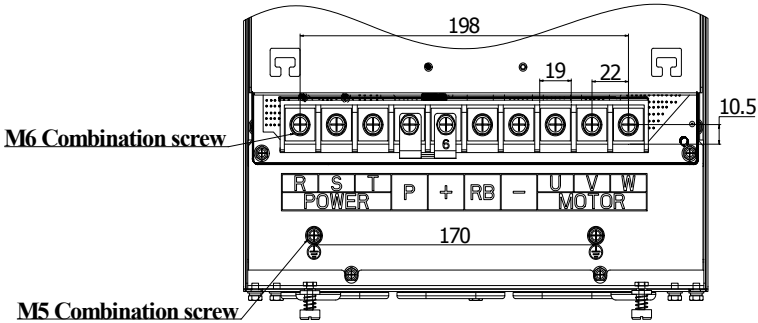

Figure 4-9: 55kW G3main circuit terminal（Frame No.：A7）

7) 75kW G3 main circuit terminal

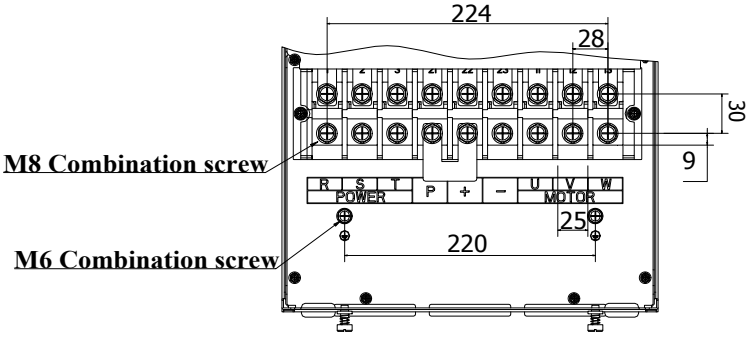

Figure 4-10: 75kW G3 main circuit terminal（Frame No.: A8）

8) 93～132kW G3 main circuit terminal

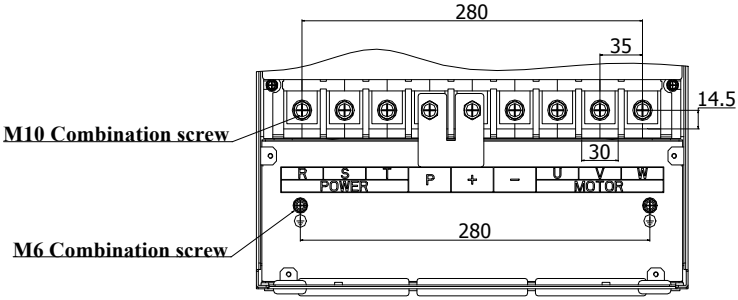

Figure 4-11: 93～132kW G3 main circuit terminal（Frame No.: A9）

9) 160kW G3 main circuit terminal

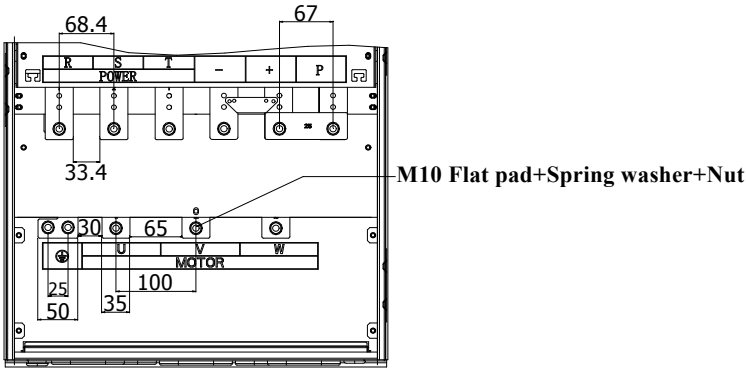

Figure 4-12. 160kW G3 main circuit terminal（Frame No.：A10）

10) 200～220kW G3 main circuit terminal

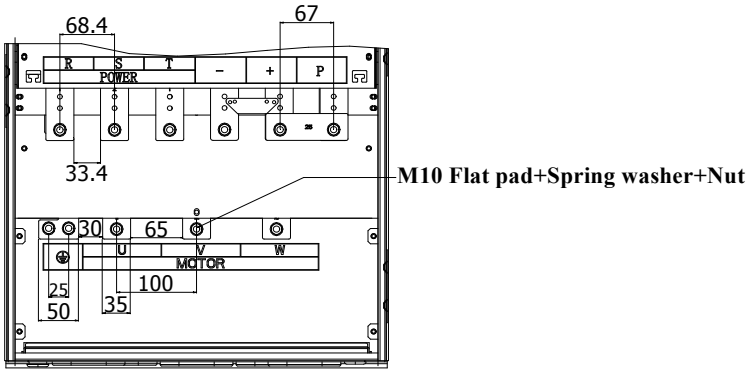

Figure 4-13. 200～220kW G3main circuit terminal（Frame No.：A11）

11) 250～450kW G3 main circuit terminal

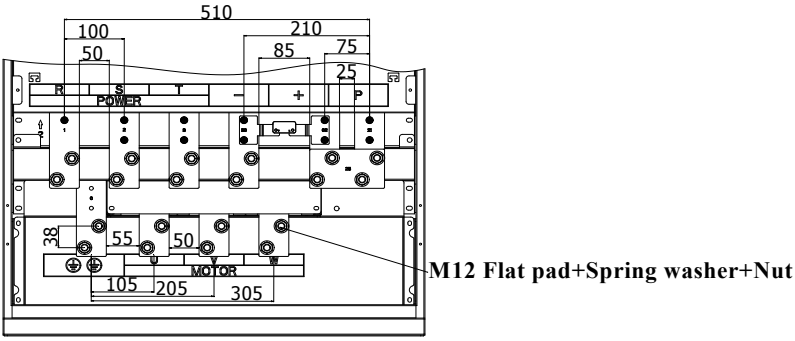

Figure 4-14. 250～450kW G3 main circuit terminal（Frame No.：A12～A13）

Note: the P / + standard configuration is in the short circuit state; if the external DC reactance is connected, it shall be disconnected and then connected.

4-3-2. Function description of main circuit terminal

Terminal	Name	Explain
R,S,T	Inverter input terminals	Connect to three-phase power supply, single-phase connects to R, T
⏚/PE	Ground terminals	Connect to ground
+,RB	Braking resistor terminals	Connect to braking resistor
U,V,W	Output terminals	Connect to three-phase motor
+,-	DC bus output terminals	Connect to braking unit
P,+	DC reactor terminals	Connect to DC reactor(remove the shorting block)

4-4.Control circuit terminals

4-4-1 Control circuit terminals arrangement

1.Control panel control circuit terminals

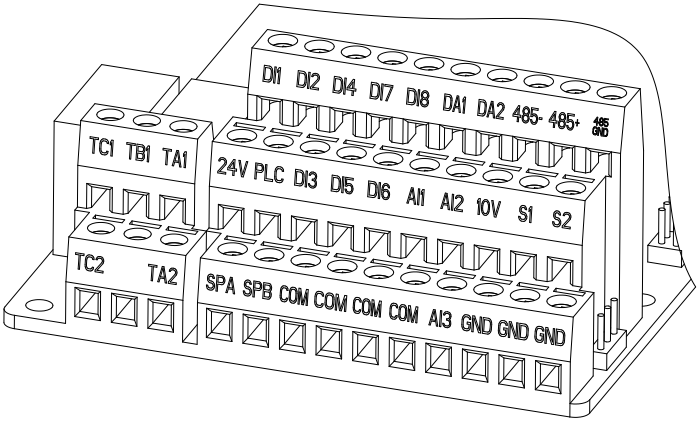

Figure 4-15: Control panel control circuit terminals

4-4-2 Description of control circuit terminals

Category	Symbol	Name	Function
Power supply	+10V-GND	＋10V power supply	Output +10V power supply, maximum output current: 10mA Generally it is used as power supply of external potentiometer, potentiometer resistance range: 1kΩ to 5kΩ
	+24V-COM	+24V power supply	Output +24V power supply, generally it is used as power supply of digital input and output terminals and external sensor. Maximum output current: 200mA
	PLC	External power input terminal	When external signal is used to drive, please unplug PLC jumpers , PLC must be connected to external power supply, and to +24V (default).
Analog input	AI1-GND	Analog input terminal 1	1.Input range:(DC 0V to 10V/0 to 20mA), depends on the selected AI1 jumper on control panel. 2.Input impedance: 20kΩ with voltage input, 510Ω with current input.
	AI2-GND	Analog input terminal 2	1.Input range:(DC 0V to 10V/0to 20mA), depends on the selected AI2 jumper on control panel. 2.Input impedance: 20kΩ with voltage input, 510Ω with current input.
	AI3	Analog input terminal 3	1. Input range:DC-10V~+10V 2. Input voltage impedance 20kΩ 3.AI3 reference potential can be GND or -10V

Category	Symbol	Name	Function
Digital input	DI1	Multi-function digital input 1	1.Opto-coupler isolation , compatible with bipolar input, are determined by choice of Jumper PLC ; 2.Input impedance: 3.3kΩ 3.Voltage range with level input: 19.2V to 28.8V; Note: DI5 input impedance 1.65kΩ
	DI2	Multi-function digital input 2	
	DI3	Multi-function digital input 3	
	DI4	Multi-function digital input 4	
	DI5	Multi-function digital input 5	
	DI6	Multi-function digital input 6	
	DI7	Multi-function digital input 7	
	DI8	Multi-function digital input 8	
	DI5	High-speed pulse input terminals	Except the function of DI1 to DI4,DI6 to DI8,DI5 can also be used as high-speed pulse input channels.Maximum input frequency: 100kHz
Analog output	DA1-GND	Analog output 1	The selected DA1 jumper on control panel determines voltage or current output. Output voltage range: 0V to 10V , output current range: 0mA to 20mA
	DA2-GND	Analog output 2	The selected DA2 jumper on control panel determines voltage or current output. Output voltage range: 0V to 10V , output current range: 0mA to 20mA
Digital output	SPA-COM	Digital output 1	Opto-coupler isolation, bipolar open collector output Output voltage range: 0V to 24V , output current range: 0mA to 50mA
	SPB-COM	Digital output 2	
	SPB-COM	High-speed pulse output	Subject to function code(F2.00)"SPB terminal output mode selection" As a high-speed pulse output, the highest frequency up to 100kHz;
Relay output	TA1-TC1	Normally open terminals	Contactor drive capacity: Normally closed contact 3A/AC 250V,normally open contact 5 A/AC 250V, COSø = 0.4.
	TB1-TC1	Normally closed terminals	
Motor temperature inspection input	S1-S2-GND	PT100 inspect wire input	PT100 temperature sensor (Note: For example , PT100 has three detection lines, find two of them which is 0Ω, connect one to S2 terminal, the other to GND ; last line connect to S1 terminal .)
Built-in RS485	485+	485 differential signal + terminal	485 communication interface, 485 differential signal terminal, use twisted-pair or shielded

Category	Symbol	Name	Function
	485-	485 differential signal - terminal	wire connect to the standard 485 communication interface 485 jump line in the control panel to decide whether to connect the terminal resistance
Auxiliary interface	J13	communication interface	CAN card, 26-pin terminal
	J10	PG card interface	12-pin terminal
	GND	GND ground interface	GND jump line decide whether to connect PE, improve the inverter anti-interference
	COM	COM ground interface	COM jump line decide whether to connect PE, improve the inverter anti-interference
	H1	COM Terminal interface	Consistent with the COM function on the terminal line.

4-4-3 Signal input terminal wiring diagram

Switch input and output signal transmission, generally use the shielded cable and wiring short distance as far as possible, good grounding and shielding layer on the inverter side, try not to over 20 m transmission distance. Drive in active way, elected to the power of crosstalk necessary filtering measures are taken, generally recommend that choose dry contact control mode.

Wiring control cable should be kept with the main circuit and high voltage lines (such as the power cord, motor connecting line, relay or contactor) more than 20 cm distance, and to avoid high voltage lines parallel to and can't be avoided and the high voltage lines cross, the proposal USES vertical wiring way, in order to prevent the misoperation caused by disturbance frequency inverter.

Dry contact mode:

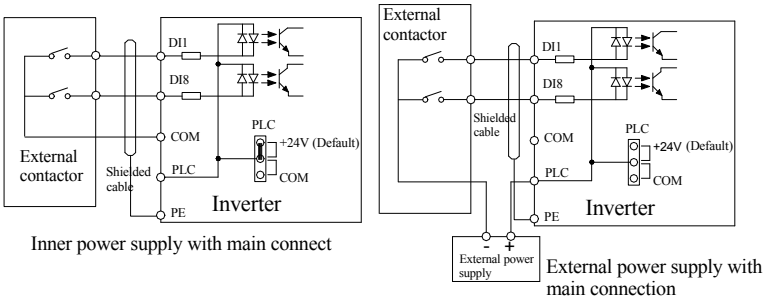

Figure 4-16: Signal input terminal wiring diagram--dry contact mode

Note: Using an external power supply, PLC and 24V jumper cap must be removed, otherwise it will damage the product.

Open collector NPN connection mode:

When the input signal from the NPN transistor, according to the use of power supply, please according to the figure + 24V and PLC jumper cap.

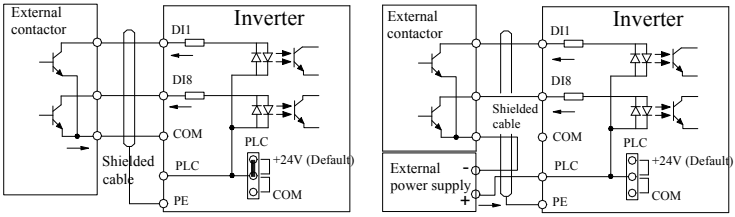

Inner power NPN connect mode External power supply NPN connect mode

Figure 4-17: Signal input terminal wiring diagram--open collector NPN connection mode

Note: Using an external power supply, PLC and 24V jumper cap must be removed, otherwise it will damage the product.

Open collector PNP connection mode:

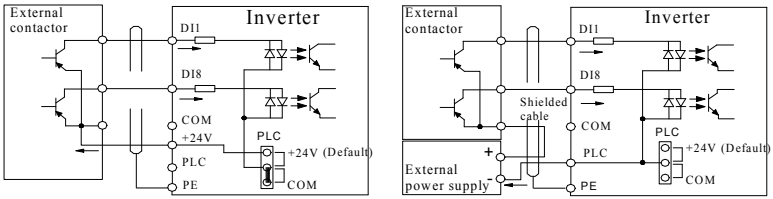

Inner power PNP connect mode External power supply PNP connect mode

Figure 4-18: Note: Using an external power supply, PLC and 24V jumper cap must be removed, otherwise it will damage the product.

Note: Using an external power supply, PLC and 24V jumper cap must be removed, otherwise it will damage the product.

4-5.Wiring Precautions

⚠Danger
Make sure that the power switch is in the OFF state before wiring operation, or electrical shock may occur! Wiring must be performed by a professional trained personnel, or this may cause damage to the equipment and personal injury! Must be grounded firmly, otherwise there is a danger of electric shock or fire hazard !
⚠Note
Make sure that the input power is consistent with the rated value of inverter, otherwise which may cause damage to the inverter! Make sure that the motor matches the inverter, otherwise which may cause damage to the motor or activate the inverter protection! Do not connect power supply to U, V, W terminals, otherwise which may cause damage to the inverter! Do not directly connect braking resistor to DC bus (P), (+) terminals, otherwise which may cause a fire!

※ The U,V,W output end of inverter can not install phase advancing capacitor or RC absorbing device. The inverter input power must be cut off when replacing the motor

※ Do not let metal chips or wire ends into inside the inverter when wiring, otherwise which may

cause malfunction to the inverter.

※ Disconnect motor or switch power-frequency power supply only when the inverter stops output

※ In order to minimize the effects of electromagnetic interference, it is recommended that a surge absorption device shall be installed additionally when electromagnetic contactor and relay is closer from the inverter.

※ External control lines of inverter shall adopt isolation device or shielded wire.

※ In addition to shielding, the wiring of input command signal should also be aligned separately, it is best to stay away from the main circuit wiring.

※ If the carrier frequency is less than 3KHz, the maximum distance between the inverter and the motor should be within 50 meters; if the carrier frequency is greater than 4KHz, the distance should be reduced appropriately, it is best to lay the wiring inside metal tube.

※ When the inverter is additionally equipped with peripherals (filter, reactor, etc.), firstly measure its insulation resistance to ground by using 1000 volt megger, so as to ensure the measured value is no less than 4 megohms.

※ When the inverter need to be started frequently, do not directly turn power off, only the control terminal or keyboard or RS485 operation command can be used to control the start/stop operation, in order to avoid damage to the rectifier bridge.

※ To prevent the occurrence of an accident, the ground terminal(⏚)must be earthed firmly(grounding impedance should be less than 10 ohms), otherwise the leakage current will occur.

※ The specifications on wires used by the main circuit wiring shall comply with the relevant provisions of the National Electrical Code.

※ The motor's capacity should be equal to or less than the inverter's capacity.

4-6.Commissioning

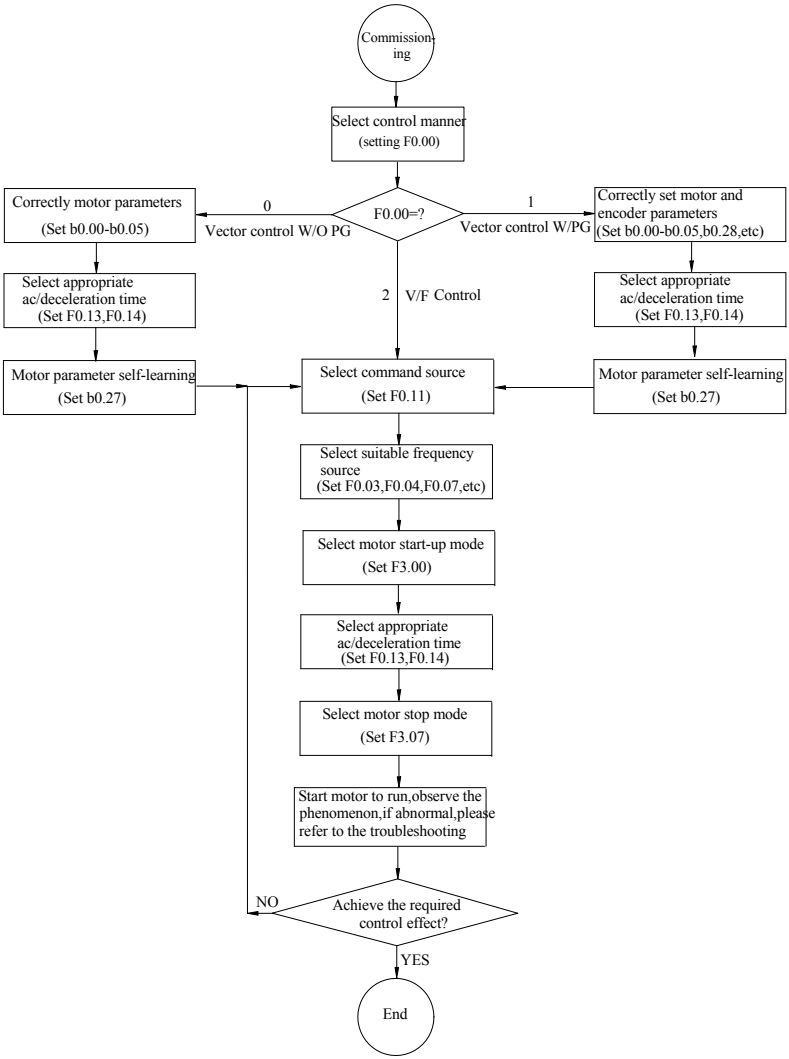

Figure 4-19: : Commissioning

- **Firstly confirm that AC input power supply voltage shall be within inverter rated input voltage range before connecting power supply to the inverter.**
- **Connect power supply to the R, S and T terminals of the inverter.**
- **Select the appropriate operation control method.**

Chapter 5 Function parameter

5-1.Menu grouping

Note:

"★": In running status, can not modify the parameter setting

"●": The actual testing data, can not be modified

"☆": In stop and run statuses, both can be changed;

"▲": "Factory parameter", no change about it.

"_" means the factory parameter is related to power or model. Please check the details in the involved parameter introduction.

Change limit refers to whether the parameters are adjustable.

y0.01 is used for parameters protection password. Parameter menu can be enter into only after inputting the right password in the function parameter mode or user change parameter mode. When the y0.01 set to 0, the password is canceled.

Parameter menu is not protected by password under user customized parameters mode.

F group is the basic function parameters,E group is to enhance function parameters, b group is a function of motor parameters,d group is the monitoring function parameters.

Code	Parameter name	Functional Description
d0	Monitoring function group	Monitoring frequency, current, etc
F0	Basic function group	Frequency setting, control mode, acceleration and deceleration time
F1	Input terminals group	Analog and digital input functions
F2	Output terminals group	Analog and digital output functions
F3	Start and stop control group	Start and stop control parameters
F4	V/F control parameters	V/F control parameters
F5	Vector control parameters	Vector control parameters
F6	Keyboard and display	To set key and display function parameters
F7	Auxiliary function group	To set Jog, jump frequency and other auxiliary function parameters
F8	Fault and protection	To set fault and protection parameters
F9	Communication parameter group	Modbus communication function setting
FA	Torque control parameters	To set parameters under torque control mode
Fb	Control optimization parameters	To set parameters of optimizing the control performance
FC	Extend parameters group	Special application parameters setting
E0	Wobbulate, fixed-length and counting	To set Wobbulate, fixed-length and counting function parameters
E1	Multi-stage command, simple PLC	Multi-speed setting, PLC operation
E2	PID function group	To set Built-in PID parameters
E3	Virtual DI, Virtual DO	Virtual I/O parameter setting
b0	Motor parameters	To set motor parameter

y0	Function code management	To set password, parameter initialization and parameter group display
y1	Fault query	Fault message query

5-1-1.d0 Group - Monitoring function group

No.	Code	Parameter name	Setting range	Factory setting
1	d0.00	Running frequency	Frequency inverter theoretical running frequency	0.01Hz
2	d0.01	Set frequency	Actual set frequency	0.01Hz
3	d0.02	DC bus voltage	Detected value for DC bus voltage	0.1V
4	d0.03	Output voltage	Actual output voltage	1V
5	d0.04	Output current	Effective value for Actual motor current	0.01A
6	d0.05	Output power	Calculated value for motor output power	0.1kW
7	d0.06	Output torque	Motor output torque percentage	0.1%
8	d0.07	DI input status	DI input status	-
9	d0.08	DO output status	DO output status	-
10	d0.09	AI1 voltage (V)	AI1 input voltage value	0.01V
11	d0.10	AI2 voltage (V)	AI2 input voltage value	0.01V
12	d0.11	AI3 voltage (V)	AI3 input voltage value	0.01V
13	d0.12	Count value	Actual pulse count value in counting function	-
14	d0.13	Length value	Actual length in fixed length function	-
15	d0.14	Actual operating speed	Motor actual running speed	-
16	d0.15	PID setting	Reference value percentage when PID runs	%
17	d0.16	PID feedback	Feedback value percentage when PID runs	%
18	d0.17	PLC stage	Stage display when PLC runs	-
19	d0.18	High-speed pulse input frequency	High-speed pulse input frequency display, unit: 0.01Khz	0.01kHz
20	d0.19	Feedback speed(unit:0.1Hz)	Frequency inverter actual output frequency	0.01Hz
21	d0.20	Remaining run time	Remaining run time display, it is for timing run control	0.1Min
22	d0.21	Linear speed	Show the line speed of DI5 high speed pulse sampling, according to the actual sample pulse number per minute and E0.07, calculate the line speed value.	1m/Min
23	d0.22	Current power-on time	Total time of current inverter power-on	1Min
24	d0.23	Current run time	Total time of current inverter run	0.1Min
25	d0.24	HDI(DI5) impulse frequency	HDI(DI5) High-speed impulse input frequency display, unit: 1Hz	1Hz
26	d0.25	Communication set value	Frequency, torque or other command values set by communication port	0.01%
27	d0.26	Encoder feedback speed	PG feedback speed, to an accuracy of	0.01Hz

			0.01Hz	
28	d0.27	Master frequency display	Frequency set by F0.03 master frequency setting source	0.01Hz
29	d0.28	Auxiliary frequency display	Frequency set by F0.04 auxiliary frequency setting source	0.01Hz
30	d0.29	Command torque (%)	Observe the set command torque under the torque control mode	0.1%
31	d0.30	Reserve		
32	d0.31	Synchro rotor position	Synchro rotor position angle	0.0
33	d0.32	Resolver position	Rotor position when rotary transformer is used as a speed feedback	-
34	d0.33	ABZ position	Position information calculated from when ABZ incremental feedback encoder is adopted	0
35	d0.34	Z signal counter	Encoder Z-phase signal count	-
36	d0.35	Inverter status	Display run, standby and other statuses	-
37	d0.36	Inverter type	1.G type (Constant torque load type) 2.F type (fans/pumps load type)	-
38	d0.37	AI1 voltage before correction	Input voltage value before AI1 linear correction	0.01V
39	d0.38	AI2 voltage before correction	Input voltage value before AI2 linear correction	0.01V
40	d0.39	AI3 voltage before correction	Input voltage value before AI3 linear correction	0.01V
41	d0.40	Reserve		
42	d0.41	Motor temperature inspection function3	PT100 inspect motor temperature value	0℃
43	d0.42~ d0.78	Reserve		

5-1-2.F0 Group - Basic function group

No.	Code	Parameter name	Setting range	Factory setting	Change
44	F0.00	Motor control manner	0.Vector control W/O PG 1.Vector control W/ PG 2.V/F control	0	★
45	F0.01	Keyboard set frequency	0.00Hz to F0.19 (Maximum frequency)	50.00Hz	☆
46	F0.02	Frequency command resolution	1: 0.1Hz; 2: 0.01Hz	2	★
47	F0.03	Frequency source master setting	0 to 10	1	★
48	F0.04	Frequency source auxiliary setting	0 to 10	0	★
49	F0.05	Reference object selection for	0. Relative to maximum frequency 1.Relative to master frequency source	0	☆

		frequency source auxiliary setting			
50	F0.06	Frequency source auxiliary setting range	0%～150%	100%	☆
51	F0.07	Frequency source superimposed selection	Units digit: Frequency source selection Tens digit: Arithmetic relationship of master and auxiliary for frequency source	00	☆
52	F0.08	Frequency source offset frequency when superimposing	0.00Hz to F0.19(Maximum frequency)	0.00Hz	☆
53	F0.09	Shutdown memory selection for digital set frequency	0: W/O memory 1: With memory	1	☆
54	F0.10	Frequency command UP / DOWN reference when running	0: Running frequency 1: Set frequency	0	★
55	F0.11	Command source selection	0.Keyboard control (LED off) 1.Terminal block control (LED on) 2.Communications command control (LED flashes)	0	☆
56	F0.12	Binding frequency source for command source	Units digit: binding frequency source selection for operation panel command Tens digit: Terminal command binding frequency source selection (0 to 9, same as units digit) Hundreds digit: Communication command binding frequency source selection (0 to 9, same as units digit)	000	☆
57	F0.13	Acceleration time 1	0.0s～6500s	Depends on models	☆
58	F0.14	Deceleration time 1	0.0s～6500s	Depends on models	☆
59	F0.15	Ac/Deceleration time unit	0:1 second;1:0.1 second; 2:0.01 second	1	★
60	F0.16	Ac/deceleration time reference frequency	0: F0.19(Maximum frequency) 1: Set frequency 2: 100Hz	0	★
61	F0.17	Carrier frequency adjustment as per temperature	0: No; 1: YES	0	☆
62	F0.18	Carrier Frequency	0.5kHz～16.0kHz	Depends on models	☆
63	F0.19	Maximum output frequency	50.00Hz～500.00Hz	50.00Hz	★
64	F0.20	Upper limit	0: F0.21 setting	0	★

		frequency source	1: AI1analog quantity setting 2: AI2 analog quantity setting 3: Panel potentiometer setting 4: High-speed pulse setting 5: Communications reference 6:AI3 analog quantity setting		
65	F0.21	Upper limit frequency	F0.23 (Lower limit frequency) to F0.19 (Maximum frequency)	50.00Hz	☆
66	F0.22	Upper limit frequency offset	0.00Hz to F0.19 (Maximum frequency)	0.00Hz	☆
67	F0.23	Lower limit frequency	0.00Hz to F0.21 (Upper limit frequency)	0.00Hz	☆
68	F0.24	Running direction	0:Same direction 1:Opposite direction	0	☆
69	F0.27	GF type	1.G type (Constant torque load type)	1	●

5-1-3.F1 Group- Input terminals group

No.	Code	Parameter name	Setting range	Factory setting	Change
70	F1.00	DI1 terminal function selection	0～51	1	★
71	F1.01	DI2 terminal function selection		2	★
72	F1.02	DI3 terminal function selection		8	★
73	F1.03	DI4 terminal function selection		9	★
74	F1.04	DI5 terminal function selection		12	★
75	F1.05	DI6 terminal function selection		13	★
76	F1.06	DI7 terminal function selection		14	★
77	F1.07	DI8 terminal function selection		15	★
78	F1.08	Undefined			
79	F1.09	Undefined			
80	F1.10	Terminal command mode	0: Two-wire type 1 1: Two-wire type 2 2: Three-wire type 1 3: Three-wire type 2	0	★
81	F1.11	Terminal UP/DOWN change rate	0.001Hz/s～65.535Hz/s	1.000Hz/s	☆
82	F1.12	Minimum input for AIC1	0.00V～F1.14	0V	☆
83	F1.13	F1.12corresponding setting	-100.0%～+100.0%	0.0%	☆
84	F1.14	Maximum input for AIC1	F1.12～+10.00V	10.00V	☆
85	F1.15	F1.14corresponding setting	-100.0%～+100.0%	100.0%	☆
86	F1.16	Minimum input for AIC2	0.00V～F1.18	0.00V	☆
87	F1.17	F1.16corresponding setting	-100.0%～+100.0%	0.0%	☆
88	F1.18	Maximum input for AIC2	F1.16～+10.00V	10.00V	☆
89	F1.19	F1.18corresponding setting	-100.0%～+100.0%	100.0%	☆

90	F1.20	Minimum input for AIC3	-10.00V～F1.22	0.00V	☆
91	F1.21	F1.20corresponding setting	-100.0%～+100.0%	0.0%	☆
92	F1.22	Maximum input for AIC 3	F1.20～+10.00V	10.00V	☆
93	F1.23	F1.22corresponding setting	-100.0%～+100.0%	100.0%	☆
94	F1.24	AI curve selection	Units digit: AI1 curve selection Tens digit: AI2 curve selection Hundreds digit:Panel potentiometer curve selection	H.321	☆
95	F1.25	AI input setting selection	Units digit: Setting selection for AI1 less than minimum input 0: Corresponding to minimum setting 1: 0.0% Tens digit: Setting selection for AI2 less than minimum input, ditto Hundreds digit: Setting selection for AI3 less than minimum input(0 to 1,ditto)	000	☆
96	F1.26	HDI Minimum pulse input	0.00kHz to F1.28	0.00kHz	☆
97	F1.27	F1.26 corresponding setting	-100.00% to +100.0%	0.0%	☆
98	F1.28	HDI Maximum input	F1.26 to 100.00kHz	50.00kHz	☆
99	F1.29	F1.28 corresponding setting	-100.00% to +100.0%	100.0%	☆
100	F1.30	DI filter time	0.000s to 1.000s	0.010s	☆
101	F1.31	AI1 filter time	0.00s to 10.00s	0.10s	☆
102	F1.32	AI2 filter time	0.00s to 10.00s	0.10s	☆
103	F1.33	AI3 filter time	0.00s to 10.00s	0.10s	☆
104	F1.34	HDI Filter time	0.00s to 10.00s	0.00s	☆
105	F1.35	DI terminal valid mode selection 1	Units digit: DI1 0: High level active 1: Low level active Tens digit: DI2 Hundreds digit: DI3 Thousands digit: DI4 Ten thousands digit: DI5	00000	★
106	F1.36	DI terminal valid mode selection 2	Units digit: DI6 0: High level active 1: Low level active Tens digit: DI7 Hundreds digit: DI8 Thousands digit: DI9 Ten thousands digit: DI10	00000	★
107	F1.37	DI1 delay time	0.0s to 3600.0s	0.0s	★

108	F1.38	DI2 delay time	0.0s to 3600.0s	0.0s	★
109	F1.39	DI3 delay time	0.0s to 3600.0s	0.0s	★
110	F1.42	Keyboard potentiometer X2	0～100.00%	1.00%	☆

5-1-4.F2 Group - Output terminals group

No.	Code	Parameter name	Setting range	Factory setting	Change
111	F2.00	SPB terminal output mode selection	0 to 1	0	☆
112	F2.01	Switching quantity output function selection	0 to 40	0	☆
113	F2.02	Relay 1 output function selection (TA1.TB1.TC1)		2	☆
114	F2.03	Undefined			
115	F2.04	SPA output function selection (Collector open circuit output terminals)		1	☆
116	F2.05	Relay 2 output function selection (TA2.TB2.TC2)		1	☆
117	F2.06	High-speed pulse output function selection	0 to 17	0	☆
118	F2.07	DA1 output function selection		2	☆
119	F2.08	DA2 output function selection		13	☆
120	F2.09	Maximum output frequency of high-speed pulse	0.01kHzto 100.00kHz	50.00kHz	☆
121	F2.10	SPB switching quantity output delay time	0.0s to 3600.0s	0.0s	☆
122	F2.11	Relay 1 output delay time	0.0s to 3600.0s	0.0s	☆
123	F2.12	Expansion card DO output delay time	0.0s to 3600.0s	0.0s	☆
124	F2.13	SPA output delay time	0.0s to 3600.0s	0.0s	☆
125	F2.14	Relay 2 output delay time	0.0s to 3600.0s	0.0s	☆
126	F2.15	DO output terminal active status selection	Units digit: SPB switching quantity 0: positive logic;1: Anti-logic Tens digit: Relay 1 Hundreds digit: Hundreds digit: Undefined Thousands digit: SPA Ten thousands digit: Relay 2	00000	☆
127	F2.16	DA1 zero bias coefficient	-100.0% to +100.0%	0.0%	☆
128	F2.17	DA1 gain	-10.00 to +10.00	1.00	☆
129	F2.18	DA2 zero bias coefficient	-100.0% to +100.0%	20.0%	☆

130	F2.19	DA2 gain	-10.00 to +10.00	0.80	☆
131	F2.20 ~F2.23	Reserve			

5-1-5.F3Group - Start and stop control group

No.	Code	Parameter name	Setting range	Factory setting	Change
132	F3.00	Start-up mode	0: Direct startup	0	☆
133	F3.03	Start frequency	0.00Hz to 10.00Hz	0.00Hz	☆
134	F3.04	Hold time for start frequency	0.0s to 100.0s	0.0s	★
135	F3.07	Stop mode	0: Deceleration parking 1: Free stop	0	☆
136	F3.08	DC Initial frequency	0.00Hz to F0.19 (Maximum frequency)	0.00Hz	☆
137	F3.09	DC Waiting time	0.0s to 100.0s	0.0s	☆
138	F3.13	Ac/deceleration mode	0: Linear acceleration and deceleration 1:S curve acceleration and deceleration A	0	★
139	F3.14	Proportion of S curve start-section	0.0% to (100.0%to F3.15)	30%	★
140	F3.15	Proportion of S curve end-section	0.0% to (100.0% to F3.14)	30%	★

5-1-6.F5 Group - Vector control parameters

No.	Code	Parameter name	Setting range	Factory setting	Change
141	F5.00	Speed loop ratio G1	1 to 100	30	☆
142	F5.01	Speed loopintegral T1	0.01s to 10.00s	0.50s	☆
143	F5.02	Switching frequency 1	0.00 to F5.05	5.00Hz	☆
144	F5.03	Speed loop ratio G2	0 to 100	20	☆
145	F5.04	Speed loop integral T2	0.01s to 10.00s	1.00s	☆
146	F5.05	Switching frequency 2	F5.02 to F0.19(Max. frequency)	10.00Hz	☆
147	F5.06	Speed loop integral	0:valid 1:invalid	0	☆
148	F5.07	Torque limit upper limit source	0 to 8	0	☆
149	F5.08	Upper limit digital setting for torque	0.0% to 200.0%	150.0%	☆
150	F5.09	Vector control differential gain	50% to 200%	150%	☆
151	F5.10	Speed loop filter time constant	0.000s to 0.100s	0.050s	☆
152	F5.11	Vector control overexcitation gain	0 to 200	64	☆
153	F5.12	Excitation regulator	0 to 60000	2000	☆

		proportional gain			
154	F5.13	Excitation regulator integral gain	0 to 60000	1300	☆
155	F5.14	Torque regulator proportional gain	0 to 60000	2000	☆
156	F5.15	Torque regulator integral gain	0 to 60000	1300	☆
157	F5.16	Synchronous machine weak magnetic mode	0: No weakening magnetic mode ; 1: Automatic adjustment mode; 2: Computation + auto-adjustment synthesis mode	1	☆
158	F5.17	Synchronous machine weak magnetic gain	0 to 50	5	☆
159	F5.18	Synchronous machine output voltage limit Margin	0 to 300%	50%	★
160	F5.24	Synchronous machine initial position angle detection current	50 to 180%	80%	☆
161	F5.25	Synchronous machine initial position angle detection	0: Detected every time; 1: Not detected; 2: Detect for 1st time power-on	0	☆
162	F5.27	Synchronous salient rate adjustment gain	50 to 500	100	☆
163	F5.28	Maximum torque current ratio control	0: Off ;1: On	0	☆
164	F5.32	Z signal Correction	0: Off ;1: On	1	☆
165	F5.37	Low speed carrier frequency	0.8K to F0.18（Carrier frequency）	1.5K	☆
166	F5.38	SVC low frequency brake mode	0: No action ;1: Action when decelerating stop	0	☆
167	F5.39	SVC low frequency braking effective frequency	0 to 10.00Hz	2.00Hz	☆
168	F5.40	SVC low frequency brake frequency step-length change	0.0005 to 1.0000Hz	0.0010 Hz	☆
169	F5.41	SVC low frequency brake current	0 to 80%	50%	☆
170	F5.47	Prohibit reversal when stopping	0: Allowed;1: prohibited	0	☆
171	F5.48	Stop angle	0.0°to 10.0°	0.8°	☆

5-1-7.F6 Group - Keyboard and display

No.	Code	Parameter name	Setting range	Factory setting	Change

172	F6.00	STOP/RESET key functions	0: STOP/RES key is enabled only under keyboard operation mode 1:STOP/RES key is enabled under any operation mode	1	☆
173	F6.01	Running status display parameters 1	0x0000 to 0xFFFF	001F	☆
174	F6.02	Running status display parameters 2	0x0000 to 0xFFFF	0000	☆
175	F6.03	Stop status display parameters	0x0000 to 0xFFFF	0033	☆
176	F6.04	Load speed display coefficient	0.0001 to 6.5000	3.0000	☆
177	F6.05	Decimal places for load speed display	0:0 decimal places 2:2 decimal places 1:1 decimal places 3:3 decimal places	1	☆
178	F6.06	Inverter module radiato temperature	0.0℃ to 100.0℃	-	●
179	F6.07	Total run time	0h to 65535h	-	●
180	F6.08	Total power-on time	0h to 65535h	-	●
181	F6.09	Total power consumption	0 to 65535 kwh	-	●
182	F6.10	Product series number	Frequency inverter series number	-	●
183	F6.11	Software version number	Control board software version	-	●
184	F6.16	Monitor selection 2	1Kbit/100bit: parameter number 10bit/1bit: parameter series number	d0.04	☆
185	F6.17	Power correction coefficient	0.0%～200.0%	100.0%	☆
186	F6.18	Multifunction key definition 1	0 to 7	0	☆
187	F6.19	Multifunction key definition 2	0 to 7	0	☆
188	F6.20	Keypad lock selection	0:RUN, STOP button valid 1:RUN, STOP, keypad encode valid 2: RUN, STOP, UP, DOWN button valid 3: STOP button valid	0	☆
189	F6.21	QUICK key function selection	0: No function; 1: Jog running 2: Shift switch display state 3: FWD/RVS switchover 4: Clear-up UP/DOWN setting 5: Free stop 6: Running command given in sequence	0	☆

5-1-8.F7 Group - Auxiliary function group

No.	Code	Parameter name	Setting range	Factory	Cha

				setting	nge
190	F7.00	Jog running frequency	0.00Hz to F0.19(Maximum frequency)	6.00Hz	☆
191	F7.01	Jog acceleration time	0.0s to 6500.0s	5.0s	☆
192	F7.02	Jog deceleration time	0.0s to 6500.0s	5.0s	☆
193	F7.03	Jog priority	0:Invalid 1: Valid	1	☆
194	F7.04	Jump frequency 1	0.00Hz to F0.19 (Maximum frequency)	0.00Hz	☆
195	F7.05	Jump frequency 2	0.00Hz to F0.19(Maximum frequency)	0.00Hz	☆
196	F7.06	Jump frequency range	0.00Hz to F0.19 (Maximum frequency)	0.00Hz	☆
197	F7.07	Jump frequency availability during ac/deceleration process	0: Invalid 1: Valid	0	☆
198	F7.08	Acceleration time 2	0.0s to 6500.0s	Depends on models	☆
199	F7.09	Deceleration time 2	0.0s to 6500.0s	Depends on models	☆
200	F7.10	Acceleration time 3	0.0s to 6500.0s	Depends on models	☆
201	F7.11	Deceleration time 3	0.0s to 6500.0s	Depends on models	☆
202	F7.12	Acceleration time 4	0.0s to 6500.0s	Depends on models	☆
203	F7.13	Deceleration time 4	0.0s to 6500.0s	Depends on models	☆
204	F7.14	Switching frequency point between acceleration time 1 and acceleration time 2	0.00Hz to F0.19 (Maximum frequency)	0.00Hz	☆
205	F7.15	Switching frequency point between deceleration time 1 and deceleration time 2	0.00Hz to F0.19 (Maximum frequency)	0.00Hz	☆
206	F7.16	Forward/reverse rotation deadband	0.00s to 3600.0s	0.00s	☆
207	F7.17	Reverse rotation control	0: Enable 1: Disable	0	☆
208	F7.18	Set frequency lower than lower limit frequency mode	0: Running at lower limit frequency 1: Stop 2: zero speed running	0	☆
209	F7.19	Droop control	0.00Hz to 10.00Hz	0.00Hz	☆
210	F7.20	Setting cumulative power-on arrival time	0h to 36000h	0h	☆
211	F7.21	Setting cumulative running arrival time	0h to 36000h	0h	☆

212	F7.22	Start protection selection	0: OFF 1: ON	0	☆
213	F7.23	Frequency detection value (FDT1)	0.00Hz to F0.19(Maximum frequency)	50.00Hz	☆
214	F7.24	Frequency detection hysteresis value (FDT1)	0.0% to 100.0% (FDT1 level)	5.0%	☆
215	F7.25	Frequency reaches detection width	0.00 to 100% (Maximum frequency)	0.0%	☆
216	F7.26	Frequency detection value (FDT2)	0.00Hz to F0.19 (Maximum frequency)	50.00Hz	☆
217	F7.27	Frequency detection hysteresis value (FDT2)	0.0% to 100.0% (FDT2 level)	5.0%	☆
218	F7.28	Random arrivals frequency detection value 1	0.00Hz to F0.19 (Maximum frequency)	50.00Hz	☆
219	F7.29	Random arrivals frequency detection width 1	0.00% to 100.0% (Maximum frequency)	0.0%	☆
220	F7.30	Random arrivals frequency detection value 2	0.00Hz to F0.19 (Maximum frequency)	50.00Hz	☆
221	F7.31	Random arrivals frequency detection width 2	0.00% to 100.0% (Maximum frequency)	0.0%	☆
222	F7.32	Zero current detection level	0.0% to 300.0% (Rated motor current)	5.0%	☆
223	F7.33	Zero current detection delay time	0.01s to 360.00s	0.10s	☆
224	F7.34	Overrun value of output current	0.0% (Not detected) 0.1% to 300.0% (Rated motor current)	200.0%	☆
225	F7.35	Output current overrun detection delay time	0.00s to 360.00s	0.00s	☆
226	F7.36	Random arrivals current 1	0.0% to 300.0% (Rated motor current)	100.0%	☆
227	F7.37	Random arrivals current 1 width	0.0% to 300.0% (Rated motor current)	0.0%	☆
228	F7.38	Random arrivals current 2	0.0% to 300.0% (Rated motor current)	100.0%	☆
229	F7.39	Random arrivals current 2 width	0.0% to 300.0% (Rated motor current)	0.0%	☆
230	F7.40	Module temperature arrival	0℃ to 100℃	75℃	☆
231	F7.41	Cooling fan control	0: Fan running only when running 1: Fan always running	0	☆
232	F7.42	Timing function selection	0: Invalid 1: Valid	0	★
233	F7.43	Timing run time selection	0: F7.44 setting; 1: AI1; 2: AI2 3: Panel potentiometer Analog input range corresponds to F7.44	0	★

234	F7.44	Timing run time	0.0Min to 6500.0Min	0.0Min	★
235	F7.45	Current running reaches the set time.	0.0Min to 6500.0Min	0.0Min	★
236	F7.46	Awakens frequency	Dormancy frequency（F7.48）to maximum frequency (F0.19)	0.00Hz	☆
237	F7.47	Awakens delay time	0.0s to 6500.0s	0.0s	☆
238	F7.48	Dormancy frequency	0.00Hz to awakens frequency(F7.46)	0.00Hz	☆
239	F7.49	Dormancy delay time	0.0s to 6500.0s	0.0s	☆
240	F7.50	AI1 input voltage protection lower limit	0.00V to F7.51	3.1V	☆
241	F7.51	AI1 input voltage protection upper limit	F7.50 to 10.00V	6.8V	☆

5-1-9.F8 Group - Fault and protection

No.	Code	Parameter name	Setting range	Factory setting	Change
242	F8.00	Overcurrent stall gain	0 to 100	20	☆
243	F8.01	Overcurrent stall protection current	100% to 200%	-	☆
244	F8.02	Motor overload protection selection	0: Invalid 1: Enable	1	☆
245	F8.03	Motor overload protection gain	0.20 to 10.00	1.00	☆
246	F8.04	Motor overload pre-alarm coefficient	50% to 100%	80%	☆
247	F8.05	Over-voltage stall gain	0 to 100	0	☆
248	F8.06	Over-voltage stall protection voltage	200V to 2500V	-	☆
249	F8.07	Input phase loss protection selection	Units digit:Input phase loss protection selection 0: Invalid 1: Enable Tens digit:contactor actuation protection 0: Invalid 1: Enable	11	☆
250	F8.08	Output phase loss protection selection	0: Invalid 1: Enable	1	☆
251	F8.09	Short to ground protection	0:Invalid 1: Valid	1	☆
252	F8.10	Number of automatic fault reset	0 to 32767	0	☆
253	F8.11	Fault DO action selection during automatic fault reset	0: OFF 1: ON	0	☆
254	F8.12	Automatic fault reset interval	0.1s to 100.0s	1.0s	☆
255	F8.13	Over-speed detection value	0.0 to 50.0% (Maximum frequency)	20.0%	☆
256	F8.14	Over-speed detection time	0.0 to 60.0s	1.0s	☆
257	F8.15	Detection value for too large speed deviation	0.0 to 50.0% (Maximum frequency)	20.0%	☆
258	F8.16	Detection time for too large speed deviation	0.0 to 60.0s	5.0s	☆
259	F8.17	Fault protection action selection 1	Units digit: Motor overload (Err.11) 0: Free stop 1: Stop at the selected mode 2: Continue to run	00000	☆

			Tens digit: input phase loss (Err.12) (Same as units digit) Hundred digit: Output phase loss (Err.13) (Same as units digit) Thousand digit: External fault (Err.15) (Same as units digit) Ten thousands digit: Communication abnormal(Err.16)(Same as units digit)		
260	F8.18	Fault protection action selection 2	Units digit: Encoder fault(Err.20) 0: Free stop 1:Switch to V/F and then stop at the selected mode 2:Switch to V/F and continue to run Tens digit: Function code read and write abnormal (Err.21) 0: Free stop 1: Stop at the selected mode Hundreds digit: Reserved Thousands digit: Motor overheating (Err.45) (Same as F8.17 units digit) Ten thousands digit: Running time arrival(Err.26)(Same as F8.17 units digit)	00000	☆
261	F8.19	Fault protection action selection 3	Units digit:User-defined fault 1(Err.27) (Same as F8.17 units digit) Tens digit:User-defined fault 2(Err.28) (Same as F8.17 units digit) Hundreds digit: Power-on time arrival (Err.29) (Same as F8.17 units digit) Thousands digit: Reserve Ten thousands digit: PID feedback loss when running (Err.31) (Same as F8.17 units digit)	00000	☆
262	F8.20	Fault protection action selection 4	Units digit: Too large speed deviation (Err.42) (Same as F8.17 units digit) Tens digit: Motor over-speed (Err.43) Hundreds digit: Initial position error (Err.51) (Same as F8.17 units digit) Thousands digit: Reserved Ten thousands digit: Reserved	00000	☆
263	F8.21～F8.23	Reserve			
264	F8.24	Fault running frequency	0: Current frequency running 1: Setting frequency running 2: Upper frequency running 3: Down frequency running 4: Abnormal reserve frequency running	0	☆
265	F8.25	Abnormal reserve frequency	60.0% to 100.0%	100%	☆
266	F8.26	Momentary power cut action selection	0: Invalid 1: Deceleration	0	☆

			2: Deceleration and stop		
267	F8.27	Frequency switching points for momentary power cut deceleration	50.0% to 100.0%	90%	☆
268	F8.28	Recovery voltage judgment time of momentary power cut	0.00s to 100.00s	0.50s	☆
269	F8.29	Judgment voltage of momentary power cut action	50.0% to 100.0% (Standard bus voltage)	80%	☆
270	F8.33	Motor temperature sensor type	0: Invalid; 1: PT100 detect	0	☆
271	F8.34	Motor over heat protection value	0～200	110	☆
272	F8.35	Motor over heat alma value	0～200	90	☆

5-1-10.F9 Group - Communication parameter

No.	Code	Parameter name	Setting range	Factory setting	Change
273	F9.00	Baud rate	Units digit：Modbus 0~1:Reserved 2:1200bps 3:2400bps 4:4800bps 5:9600bps 6:19200bps 7:38400bps 8:57600bps 9:115200bps Tens digit：Profibus-DP 0:115200bps 1:208300bps 2:256000bps 3:512000bps Hundreds digit: Reserved Thousands digit: CAN bus baud rate 0:20Kbps 1:50Kbps 2:100Kbps 3:125Kbps 4:250Kbps 5:500Kbps 6:Reserved	6005	☆
274	F9.01	Data format	0: No parity (8-N-2) 2: Odd parity (8-O-1) 1: Even parity (8-E-1); 3: No parity (8-N-1)	0	☆
275	F9.02	This unit address	1-250, 0 for broadcast address	1	☆
276	F9.03	Response delay	0ms-20ms	2ms	☆
277	F9.04	Communication timeout time	0.0（Invalid）; 0.1~60.0s	0.0	☆

278	F9.05	Data protocol selection	Units digit: MODBUS 0: Non-standard MODBUS protocol 1: Standard MODBUS protocol Tens digit: Profibus-DP 0: PP01 format 1: PP02 format 2: PP03 format 3: PP05 format	31	☆
279	F9.06	Current resolution	0: 0.01A 1: 0.1A	0	☆
280	F9.07	Baud rate	Units digit:MODBUS Tens digit:Profibus-DP Hundreds digit:Reserve Thousands digit:CAN bus baudrate	0	☆

5-1-11.FA roup - Torque control parameters

No.	Code	Parameter name	Setting range	Factory setting	Change
281	FA.00	Speed/torque control mode selection	0: Speed control 1: Torque control	0	★
282	FA.01	Torque setting source selection under torque control mode	0: Keyboard setting (FA.02) 1: Analog AI1 setting 2: Analog AI2 setting 3: Panel potentiometer setting 4: High-speed pulse setting 5: Communications reference 6: MIN (AI1, AI2) 7: MAX (AI1, AI2) 8. High-speed pulse setting	0	★
283	FA.02	Torque figures setunder torque control mode	-200.0% to 200.0%	150%	☆
284	FA.03	Torque control acceleration time	0.00s to 650.00s	0.00s	☆
285	FA.04	Torque control deceleration time	0.00s to 650.00s	0.00s	☆
286	FA.05	Torque control forward maximum frequency	0.00Hz to F0.19(Maximum frequency)	50.00Hz	☆
287	FA.06	Torque control backward maximum frequency	0.00Hz to F0.19 (Maximum frequency)	50.00Hz	☆
288	FA.07	Speed/torque control mode selection	0: Speed control 1: Torque control	0.00s	☆

5-1-12.Fb Group - Control optimization parameters

No.	Code	Parameter name	Setting range	Factory setting	Change
289	Fb.00	Fast current limiting manner	0: Invalid 1: Enable	1	☆

290	Fb.01	Under-voltage point setting	-	Depends on models	☆
291	Fb.02	Over-voltage point setting	200.0V to 2500.0V	-	★
292	Fb.03	Deadband compensation mode selection	0: No compensation 1: Compensation mode 1 2: Compensation mode 2	1	☆
293	Fb.04	Current detection compensation	100 to 120	110	☆
294	Fb.05	Vector optimization without PG mode selection	0: No optimization 1: Optimization mode 1 2: Optimization mode 2	1	★
295	Fb.06	Upper limiting frequency for DPWM switching	0.00Hz to 150Hz	12.00Hz	☆
296	Fb.07	PWM modulation manner	0:Asynchronous; 1:Synchronous	0	☆
297	Fb.08	Random PWM depth	0: Invalid 1 to 10: PWM carrier frequency random depth	0	☆

5-1-13.FC Group - Extended parameter group

No.	Code	Parameter name	Setting range	Factory setting	Change
298	FC.00	Undefined			
299	FC.01	Proportional linkage coefficient	0.00~10.00	0	☆
300	FC.02	PID start deviation	0.0~100.0	0	☆

5-1-14.E0 Group - Wobbulate, fixed-length and counting

No.	Code	Parameter name	Setting range	Factory setting	Change
301	E0.00	Swing setting manner	0: Relative to center frequency 1: Relative to maximum frequency	0	☆
302	E0.01	Wobbulate range	0.0% to 100.0%	0.0%	☆
303	E0.02	Sudden jump frequency range	0.0% to 50.0%	0.0%	☆
304	E0.03	Wobbulate cycle	0.1s to 3000.0s	10.0s	☆
305	E0.04	Triangle wave rise time coefficient	0.1% to 100.0%	50.0%	☆
306	E0.05	Set length	0m to 65535m	1000m	☆
307	E0.06	Actual length	0m to 65535m	0m	☆
308	E0.07	Pulse per meter	0.1 to 6553.5	100.0	☆
309	E0.08	Set count value	1 to 65535	1000	☆
310	E0.09	Specified count value	1 to 65535	1000	☆

5-1-15.E1 Group, Multi-speed, Simple PLC

No.	Code	Parameter name	Setting range	Factory setting	Change
311	E1.00	0-stage speed setting 0X	-100.0% to 100.0%	0.0%	☆
312	E1.01	1-stage speed setting 1X	-100.0% to 100.0%	0.0%	☆
313	E1.02	2-stage speed setting 2X	-100.0% to 100.0%	0.0%	☆
314	E1.03	3-stage speed setting 3X	-100.0% to 100.0%	0.0%	☆
315	E1.04	4-stage speed setting 4X	-100.0% to 100.0%	0.0%	☆
316	E1.05	5-stage speed setting 5X	-100.0% to 100.0%	0.0%	☆
317	E1.06	6-stage speed setting 6X	-100.0% to 100.0%	0.0%	☆
318	E1.07	7-stage speed setting 7X	-100.0% to 100.0%	0.0%	☆
319	E1.08	8-stage speed setting 8X	-100.0% to 100.0%	0.0%	☆
320	E1.09	9-stage speed setting 9X	-100.0% to 100.0%	0.0%	☆
321	E1.10	10-stage speed setting 10X	-100.0% to 100.0%	0.0%	☆
322	E1.11	11-stage speed setting 11X	-100.0% to 100.0%	0.0%	☆
323	E1.12	12-stage speed setting 12X	-100.0% to 100.0%	0.0%	☆
324	E1.13	13-stage speed setting 13X	-100.0% to 100.0%	0.0%	☆
325	E1.14	14-stage speed setting 14X	-100.0% to 100.0%	0.0%	☆
326	E1.15	15-stage speed setting 15X	-100.0% to 100.0%	0.0%	☆
327	E1.16	Simple PLC running mode	0: Stop after single running 1: Hold final value after single running 2: Circulating	0	☆
328	E1.17	Simple PLC power-down memory selection	Units digit: power-down memory selection 0: power-down without memory 1: power-down with memory Tens digit: Stop memory selection 0: Stop without memory 1: Stop with memory	11	☆
329	E1.18	0 stage running time T0	0.0s(h) to 6500.0s(h)	0.0s(h)	☆
330	E1.19	0 stage ac/deceleration time selection	0 to 3	0	☆
331	E1.20	1 stage running time T1	0.0s(h) to 6500.0s(h)	0.0s(h)	☆
332	E1.21	1 stage ac/deceleration time selection	0 to 3	0	☆
333	E1.22	2 stage running time T2	0.0s(h) to 6500.0s(h)	0.0s(h)	☆
334	E1.23	2 stage ac/deceleration time selection	0 to 3	0	☆

335	E1.24	3 stage running time T3	0.0s(h) to 6500.0s(h)	0.0s(h)	☆
336	E1.25	3 stage ac/deceleration time selection	0 to 3	0	☆
337	E1.26	4 stage running time T4	0.0s(h) to 6500.0s(h)	0.0s(h)	☆
338	E1.27	4 stage ac/deceleration time selection	0 to 3	0	☆
339	E1.28	5 stage running time T5	0.0s(h) to 6500.0s(h)	0.0s(h)	☆
340	E1.29	5 stage ac/deceleration time selection	0 to 3	0	☆
341	E1.30	6 stage running time T6	0.0s(h) to 6500.0s(h)	0.0s(h)	☆
342	E1.31	6 stage ac/deceleration time selection	0 to 3	0	☆
343	E1.32	7 stage running time T7	0.0s(h) to 6500.0s(h)	0.0s(h)	☆
344	E1.33	7 stage ac/deceleration time selection	0 to 3	0	☆
345	E1.34	8 stage running time T8	0.0s(h) to 6500.0s(h)	0.0s(h)	☆
346	E1.35	8 stage ac/deceleration time selection	0 to 3	0	☆
347	E1.36	9 stage running time T9	0.0s(h) to 6500.0s(h)	0.0s(h)	☆
348	E1.37	9 stage ac/deceleration time selection	0 to 3	0	☆
349	E1.38	10 stage running time T10	0.0s(h) to 6500.0s(h)	0.0s(h)	☆
350	E1.39	10 stage ac/deceleration time selection	0 to 3	0	☆
351	E1.40	11 stage running time T11	0.0s(h) to 6500.0s(h)	0.0s(h)	☆
352	E1.41	11 stage ac/deceleration time selection	0 to 3	0	☆
353	E1.42	12 stage running time T12	0.0s(h) to 6500.0s(h)	0.0s(h)	☆
354	E1.43	12 stage ac/deceleration time selection	0 to 3	0	☆
355	E1.44	13 stage running time T13	0.0s(h) to 6500.0s(h)	0.0s(h)	☆
356	E1.45	13 stage ac/deceleration time selection	0 to 3	0	☆
357	E1.46	14 stage running time T14	0.0s(h) to 6500.0s(h)	0.0s(h)	☆
358	E1.47	14 stage ac/deceleration time selection	0 to 3	0	☆
359	E1.48	15 stage running time T15	0.0s(h) to 6500.0s(h)	0.0s(h)	☆
360	E1.49	15 stage ac/deceleration time selection	0 to 3	0	☆

361	E1.50	Simple PLC run-time uni	0: S (seconds) 1: H (hours)	0	☆
362	E1.51	Multi-stage command 0 reference manner	0: Function code E1.00 reference 1: Analog AI1 reference 2: Analog AI2 reference 3: Panel potentiometer setting 4: High-speed pulse setting 5: PID control setting 6:Keyboard set frequency (F0.01) setting, UP/DOWN can be modified 7. Analog AI3 given	0	☆

5-1-16.E2 Group - PID function

No.	Code	Parameter name	Setting range	Factory setting	Change
363	E2.00	PID setting source	0: E2.01 setting 1: Analog AI1 reference 2: Analog AI2 reference 3: Panel potentiometer setting 4: High-speed pulse setting 5: Communications reference 6: Multi-stage command reference 7: Analog AI3 eference	0	☆
364	E2.01	PID keyboard reference	0.0% to 100.0%	50.0%	☆
365	E2.02	PID feedback source	0 to 8	0	☆
366	E2.03	PID action direction	0: positive 1: N egative	0	☆
367	E2.04	PID setting feedback range	0 to 65535	1000	☆
368	E2.05	PID inversion cutoff frequency	0.00 to F0.19(Maximum frequency)	0.00Hz	☆
369	E2.06	PID deviation limit	0.0% to 100.0%	0.0%	☆
370	E2.07	PID differential limiting	0.00% to 100.00%	0.10%	☆
371	E2.08	PID reference change time	0.00s to 650.00s	0.00s	☆
372	E2.09	PID feedback filter time	0.00s to 60.00s	0.00s	☆
373	E2.10	PID output filter time	0.00s to 60.00s	0.00s	☆
374	E2.11	PID feedback loss detection value	0.0%: Not judged feedback loss 0.1% to 100.0%	0.0%	☆
375	E2.12	PID feedback loss detection time	0.0s to 20.0s	0.0s	☆
376	E2.13	Proportional gain KP1	0.0 to 200.0	80.0	☆
377	E2.14	Integration time Ti1	0.01s to 10.00s	0.50s	☆
378	E2.15	Differential time Td1	0.00s to 10.000s	0.000s	☆
379	E2.16	Proportional gain KP2	0.0 to 200.0	20.0	☆
380	E2.17	Integration time Ti2	0.01s to 10.00s	2.00s	☆

381	E2.18	Differential time Td2	0.00 to 10.000	0.000s	☆
382	E2.19	PID parameter switching conditions	0: No switching 1: Switching via terminals 2: Automatically switching according to deviation.	0	☆
383	E2.20	PID parameter switching deviation 1	0.0% to E2.21	20.0%	☆
384	E2.21	PID parameter switching deviation 2	E2.20 to 100.0%	80.0%	☆
385	E2.22	PID integral properties	Units digit: integral separation 0: Invalid; 1: Valid Tens digit: whether stop integration when output reaches limit 0: Continue; 1: Stop	00	☆
386	E2.23	PID initial value	0.0% to 100.0%	0.0%	☆
387	E2.24	PID initial value hold time	0.00s to 360.00s	0.00s	☆
388	E2.25	Maximum deviation of twice outputs(forward)	0.00% to 100.00%	1.00%	☆
389	E2.26	Maximum deviation of twice outputs(backward)	0.00% to 100.00%	1.00%	☆
390	E2.27	Computing status after PID stop	0: Stop without computing 1: Stop with computing	1	☆

5-1-17.E3 Group – Virtual DI,Virtual DO

No.	Code	Parameter name	Setting range	Factory setting	Change
391	E3.00	Virtual VDI1 terminal function selection	0 to 50	0	★
392	E3.01	Virtual VDI2 terminal function selection	0 to 50	0	★
393	E3.02	Virtual VDI3 terminal function selection	0 to 50	0	★
394	E3.03	Virtual VDI4 terminal function selection	0 to 50	0	★
395	E3.04	Virtual VDI5 terminal function selection	0 to 50	0	★
396	E3.05	Virtual VDI terminal status set	Units digit:Virtual VDI1 Tens digit:Virtual VDI2 Hundreds digit:Virtual VDI3 Thousands digit:Virtual VDI4 Tens of thousands:Virtual VDI5	00000	★
397	E3.06	Virtual VDI terminal effective status set mode	Units digit:Virtual VDI1 Tens digit:Virtual VDI2 Hundreds digit:Virtual VDI3 Thousands digit:Virtual VDI4 Tens of thousands:Virtual VDI5	11111	★

398	E3.07	AI1 terminal as a function selection of DI	0 to 50	0	★
399	E3.08	AI2 terminal as a function selection of DI	0 to 50	0	★
400	E3.09	Panel potentiometer as a function selection of DI	0 to 50		
401	E3.10	AI as DI effective mode selection	Units digit: AI1 0:High level effectively 1:Low level effectively Tens digit:AI2(0~1,same as units digit) Hundreds digit: Panel potentiometer(0 to 1,same as units digit)	000	★
402	E3.11	Virtual VDO1 output function selection	0 to 40	0	☆
403	E3.12	Virtual VDO2 output function	0 to 40	0	☆
404	E3.13	Virtual VDO3 output function	0 to 40	0	☆
405	E3.14	Virtual VDO4 output function	0 to 40	0	☆
406	E3.15	Virtual VDO5 output function	0 to 40	0	☆
407	E3.16	VDO output terminal effective status selection	Units digit:VDO1 0:Positive logic 1:Negative logic Tens digit: VDO2(0~1,same as above) Hundreds digit:VDO3(0~1,same as above) Thousands digit:VDO4(0~1,same as above) Tens of thousands digit:VDO5 （0~1,same as above）	00000	☆
408	E3.17	VDO1 output delay time	0.0s to 3600.0s	0.0s	☆
409	E3.18	VDO2 output delay time	0.0s to 3600.0s	0.0s	☆
410	E3.19	VDO3 output delay time	0.0s to 3600.0s	0.0s	☆
411	E3.20	VDO4 output delay time	0.0s to 3600.0s	0.0s	☆
412	E3.21	VDO5 output delay time	0.0s to 3600.0s	0.0s	☆

5-1-18.b0 Group -Motor parameters

No.	Code	Parameter name	Setting range	Factory setting	Change
413	b0.00	Motor type selection	2: Permanent magnet synchronous motor	2	●
414	b0.01	Rated power	0.1kW to 1000.0kW	Depends on models	★
415	b0.02	Rated voltage	1V to 2000V	Depends on models	★

416	b0.03	Rated current	0.01A to 655.35A (Inverter power ≦ 55kW) 0.1A to 6553.5A (Inverter rate> 55kW)	Depends on models	★
417	b0.04	Rated frequency	0.01Hz to F0.19 (Maximum frequency)	Depends on models	★
418	b0.05	Rated speed	1rpm to 36000rpm	Depends on models	★
419	b0.11	Synchronous motor stator resistance	0.001Ω to 65.535Ω (Inverter power <= 55kW) 0.0001Ω to 6.5535Ω (Inverter power> 55kW)	-	★
420	b0.12	Synchronous D-axis inductance	0.01mH to 655.35mH (Inverter power <=55kW) 0.001mH to 65.535mH (Inverter power> 55kW)	-	★
421	b0.13	Synchronous Q-axis inductance	0.01mH to 655.35mH (Inverter power <=55kW) 0.001mH to 65.535mH (Inverter power> 55kW)	-	★
422	b0.14	Synchronous motor back-EMF	0.1V to 6553.5V	-	★
423	b0.27	Motor parameter auto tunning	0: No operation 11: Synchronous motor parameters still auto tunning 12: Synchronous motor parameters comprehensive auto tunning	0	★
424	b0.28	Encoder type	0: ABZ incremental encoder 1: UVW incremental encoder 2: Rotational transformer 3: Sine and cosine encoder 4: Wire-saving UVW encoder	0	★
425	b0.29	Encoder every turn pulse number	1 to 65535	2500	★
426	b0.30	Encoder installation angle	0.00 to 359.90	0.00	★
427	b0.31	ABZ incremental encoder AB phase sequence	0: Forward 1: Reverse	0	★
428	b0.32	UVW encoder offset angle	0.00 to 359.90	0.00	★
429	b0.33	UVW encoder UVW phase sequence	0: Forward 1: Reverse	0	★
430	b0.34	Speed feedback PG disconnection detection time	0.0s: OFF 0.1s to 10.0s	0.0s	★

431	b0.35	Pole-pairs of rotary transformer	1 to 65535	1	★

5-1-19.y0 Group - Function code management

No.	Code	Parameter name	Setting range	Factory setting	Change
432	y0.00	Parameter initialization	0: No operation 1: Restore default parameter values, not including motor parameters 2: Clear history 3: Restore default parameter values, including motor parameters 4: backup current user parameters 501: Restore from backup user parameters 10: Clear keyboard storage area3 11:upload parameter to keyboard storage area 1 12:upload parameter to keyboard storage area 2 21: Download the parameters from keyboard storage 1 area to the storage system 3 22: Download the parameters from keyboard storage 2 area to the storage system 3	0	★
433	y0.01	User password	0 to 65535	0	☆
434	y0.02	Function parameter group display selection	Units digit: D group display selection 0: Not displays 1: Displays Tens digit: E group display selection(the same above) Hundreds digit: b group display selection(the same above) Thousands digit: y group display selection(the same above) Tens thousands digit: L group display selection(the same above)	11111	★
435	y0.03	Personality parameter group display selection	Units digit:User's customization parameter display selection 0:Not display 1:Display Tens digit : User's change parameter display selection 0:Not display 1:Display	00	☆
436	y0.04	Function code modification properties	0: Modifiable 1: Not modifiable	0	☆

5-1-20.y1 Group -Fault query

No.	Code	Parameter name	Setting range	Factory setting	Change
437	y1.00	Type of the first fault	0: No fault 1: Inverter unit protection 2: Acceleration overcurrent 3: Deceleration overcurrent	-	●
438	y1.01	Type of the second fault		-	●
439	y1.02	Type of the third(at last) fault		-	●

			4: Constant speed overcurrent 5: Acceleration overvoltage 6: Deceleration overvoltage 7: Constant speed overvoltage 8: Control power failure 9: Undervoltage 10: Inverter overload 11: Motor Overload 12: Input phase loss 13: Output phase loss 14: Module overheating 15: External fault 16: Communication abnormal 17: Contactor abnormal 18: Current detection abnormal 19: Motor self-learning abnormal 20: Encoder/PG card abnormal 21: Parameter read and write abnormal 22: Inverter hardware abnormal 23: Motor short to ground 24: Reserved 25: Reserved 26: Running time arrival 27: Custom fault 1 28: Custom fault 2 29; Power-on time arrival 30: Load drop 31: PID feedback loss when running 40: Fast current limiting timeout 41: Switch motor when running 42: Too large speed deviation 43: Motor overspeed 45:Motor over-temperature 51:Initial position error COF: Communication failure		
440	y1.03	Frequency of the third(at last) fault	-	-	●
441	y1.04	Current of the third(at last) fault	-	-	●
442	y1.05	Bus voltage of the third(at last) fault	-	-	●
443	y1.06	Input terminal status of the third(at last) fault	-	-	●
444	y1.07	Output terminal status of the third(at last) fault	-	-	●
445	y1.08	Reserved	-		
446	y1.09	Power-on time of the third(at		-	●

		last) fault			
447	y1.10	Running time of the third(at last) fault	-	-	●
448	y1.11	Reserve	-		
449	y1.12	Reserve			
450	y1.13	Frequency of the second fault		-	●
451	y1.14	Current of the second fault	-	-	●
452	y1.15	Bus voltage of the second fault	-	-	●
453	y1.16	Input terminal status of the second fault	-	-	●
454	y1.17	Output terminal status of the second fault	-	-	●
455	y1.18	Reserved	-		
456	y1.19	Power-on time of the second fault		-	●
457	y1.20	Running time of the second fault	-	-	●
458	y1.21	Reserve	-		
459	y1.22	Reserve			
460	y1.23	Frequency of the first fault		-	●
461	y1.24	Current of the first fault	-	-	●
462	y1.25	Bus voltage of the first fault	-	-	●
463	y1.26	Input terminal status of the first fault	-	-	●
464	y1.27	Output terminal status of the first fault	-	-	●
465	y1.28	Reserved	-		
466	y1.29	Power-on time of the first fault		-	●
467	y1.30	Running time of the first fault	-	-	●

5-2.Function parameter description

5-2-1.Basic monitoring parameters: d0.00-d0.41

d0 parameters group is used to monitor the inverter running status information.User can view those information through the panel to facilitate on-site commissioning, also read parameters group value via communication for host computer monitoring.

For the specific parameters function code, name and the smallest unit , check Table 5-2.

Code	Name	Unit
d0.00	Running frequency (Hz)	0.01Hz
Actual output frequency		
d0.01	Set frequency (Hz)	0.01Hz
Actual set frequency		
d0.02	Bus voltage (V)	0.1V
Detected value for DC bus voltage		
d0.03	Output voltage (V)	1V

Actual output voltage		
d0.04	Output current (A)	0.01A
Effective value for Actual motor current		
d0.05	Output power (kW)	0.1kW
Calculated value for motor output power		
d0.06	Output torque (%)	0.1%
Motor output torque percentage		
d0.07	DI input status	-

DI input status, this value is a hexadecimal digits. The table listed each input terminal status sequence for each bit:

0 to 10 bits	Input terminal status
0	Invalid
1	Valid

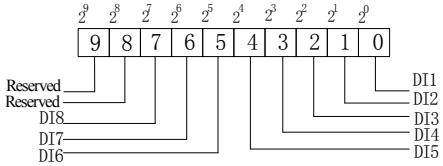

Figure5-1:DI1 the sequence of the input terminal

d0.08	DO output status	-

DO output status, this value is a hexadecimal digits. The table listed each output terminal status sequence for each bit:

0 to 10 bits	Output terminal status
0	Invalid
1	Valid

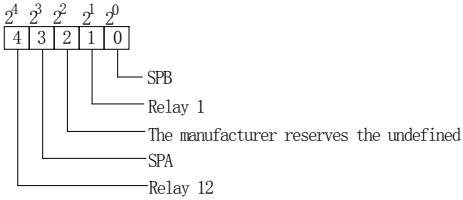

Figure5-2:DO the sequence of the Output terminal

d0.09	AI1 voltage (V)	0.01V
AI1 input voltage value		
d0.10	AI2 voltage (V)	0.01V
AI2 input voltage value		
d0.11	AI3 voltage (V)	0.01V
AI3 input voltage value		
d0.12	Count value	-
Actual pulse count value in counting function		
d0.13	Length value	-

Actual length in fixed length function		
d0.14	Actual speed	-
Motor Actual running speed display		
d0.15	PID setting	%
Reference value percentage under PID adjustment mode		
d0.16	PID feedback	%
Feedback value percentage under PID adjustment mode		
d0.17	PLC stage	-
Stage display when PID program is running		
d0.18	High-speed pulse input pulse frequency (Hz)	0.01kHz
High-speed pulse input frequency display, unit: 0.01Khz		
d0.19	Feedback speed(unit:0.1Hz)	0.1Hz
PG feedback speed, to an accuracy of 0.1hz		
d0.20	Remaining run time	0.1Min
Remaining run time display, it is for timing run control		
d0.21	Linear speed	1m/Min
Show the line speed of DI5 high speed pulse sampling, according to the actual sample pulse number per minute and E0.07, calculate the line speed value.		
d0.22	Current power-on time	1Min
Total time of current inverter power-on		
d0.23	Current run time	0.1Min
Total time of current inverter run		
d0.24	High-speed pulse input pulse frequency	1Hz
High-speed pulse input frequency display, unit: 1hz		
d0.25	Communication set value	0.01%
Frequency, torque or other command values set by communication port		
d0.26	Encoder feedback speed	0.01Hz
PG feedback speed, to an accuracy of 0.01hz		
d0.27	Master frequency setting display	0.01Hz
Frequency set by F0.03 master frequency setting source		
d0.28	Auxiliary frequency setting display	0.01Hz
Frequency set by F0.04 auxiliary frequency setting source		
d0.29	Command torque (%)	0.1%
Display the set target torque under torque control mode		
d0.30	Reserve	Reserve
Reserve		
d0.31	Synchro rotor position	0.0°
Current position angle of synchronous motor rotor		
d0.32	Resolver position	-
Rotor position when rotary transformer is used as a speed feedback		
d0.33	ABZ position	0
Displays AB phase pulse count of the current ABZ or UVW encoder		
d0.34	Z signal counter	
Displays Z phase pulse count of the current ABZ or UVW encoder		
d0.35	Inverter status	-

Displays inverter running status information Data definition format is as follows:

Bit0	0: Stop; 1: Forward ; 2: Reverse
Bit1	
Bit2	0: Constant; 1: Acceleration; 2: Deceleration
Bit3	
Bit4	0: bus voltage normal; 1: Undervoltage

d0.36	Inverter type	-
1.G type (Constant torque load type); 2.F type (fans/pumps load type)		
d0.37	AI1 voltage before correction	0.01V
d0.38	AI2 voltage before correction	0.01V
d0.39	Panel potentiometer voltage before correction	0.01V
d0.40	Reserve	
d0.41	motor temperature inspection function3	0℃
Motor temperature sensor signal,need connect to control board S1 S2 GND terminal.		

5-2-2.Basic function group: F0.00-F0.27

Code	Parameter name	Setting range		Factory setting	Change
F0.00	Motor control mode	Vector control without PG	0	0	★
		Vector control with PG	1		
		V/F control	2		
0: Vector control without PG Refers to the open-loop vector control for high-performance control applications typically , only one inverter to drive a motor. 1: Vector control with PG Refers to the closed-loop vector control, motor encoder client must be installed , the drive must be matching with the same type of PG encoder card . Suitable for high-precision speed control or torque control . An inverter can drive only one motor. 2:V/F control Suitable for less precision control applications, such as fan and pump loads .Oneinverter can be used for several motors at the same time. Note:When vector control mode , the drive andmotor capacity can not be vary widely.The drive's power can be bigger than motor's power two degree or smaller than motor's power one degree.If not, it may result in not very good performancecontrol , or the drive system does not work normally .					
F0.01	Keyboard set frequency	0.00Hz to F0.19(Maximum frequency)		50.00Hz	☆
When "Digital Setting" or "Terminal UP/DOWN " is selected as frequency source, the parameter value is the initial value of the inverter frequency digital setting.					
F0.02	Frequency command resolution	0.1Hz	1	2	★
		0.01Hz	2		
This parameter is used to determine the resolution of all related frequency parameters. When the frequency resolution is 0.1Hz, PI550-E maximum output frequency can reach 500.00Hz, when the frequency resolution is 0.01Hz , PI550-E maximum output frequency is 320.00Hz. Note: when modifying the function parameters, the number of decimal places of all related frequency parameters will change displayed, the frequency value will change accordingly.					
F0.03	Frequency source master setting	Keyboard set frequency (F0.01, UP/DOWN can be modified, power-down without memory)	0	1	★
		Keyboard set frequency (F0.01, UP/DOWN can be modified, power-down with memory)	1		
		Analog AI1 setting	2		
		Analog AI2 setting	3		
		Panel potentiometer setting	4		

		High-speed pulse setting	5		
		Multi-speed operation setting	6		
		Simple PLC program setting	7		
		PID control setting	8		
		Remote communications setting	9		
		Analog AI3 setting	10		

Select inverter master reference frequency input channels. There are 10 master reference frequency channels in all:

0: Keyboard set frequency (F0.01, UP/DOWN can be modified, power-down without memory)

Initial value for the set frequency is F0.01 "preset frequency" value. The set frequency value of the inverter can be changed by using the ▲ key and ▼ key on the keyboard (or multi-function input terminals UP, DOWN).

The Inverter powers down and then powers on again, the set frequency value will be recovered as F0.01 "digital preset frequency value".

1: Keyboard set frequency (F0.01, UP/DOWN can be modified, power-down with memory)

Initial value for the set frequency is F0.01 "preset frequency" value. The set frequency value of the inverter can be changed by using the ▲ key and ▼ key on the keyboard (or multi-function input terminals UP, DOWN).

The Inverter powers down and then powers on again, the set frequency value is same as the frequency of the last power-down

Please note that F0.09 is for "digital set frequency stop memory selection ", F0.09 is used to select SAVE or CLEAR frequency correction when the inverter stops Besides, F0.09 is not related to the power-down memory but shutdown.

2: Analog AI1 setting

3: Analog AI2 setting

4: Panel potentiometer setting

6: Multi-speed operation setting

When multi-stage command operation mode is selected, the different input state combination of DI terminal correspond to the different set frequency value. PI550-E can set up more than 4 multi-stage command terminals and 16 statuses, and any 16 "multi-stage commands "can be achieved correspondence through E1 group function code, the "multi-stage command" refers to the percent of F0.19 relative to maximum frequency.

Under the mode, DI terminal function in F1 group parameters will be required to set as the multi-stage command.

7: Simple PLC program setting

Under the mode, the inverter operating frequency source can be switched between 1 to 16 any frequency commands, the user can set hold time and ac/deceleration time for 1 to 16 frequency command , the specific content refers to the related E1 group instructions.

8: PID control setting

Select process PID control output as the operating frequency. Generally it is used for closed-loop control, such as constant pressure closed-loop control, constant tension closed-loop control and other occasions.

Select PID as the frequency source, you need to set E2 group "PID function" parameters.

9:Remote communications setting

PI550-E supports Modbus communication. Communication card must be installed when using the function.

10: Analog AI3 input, voltage input range -10v~+10v.

F0.04	Frequency source auxiliary	Keyboard set frequency (F0.01, UP/DOWN can be modified, power-down without memory)	0	0	★
		Keyboard set frequency (F0.01, UP/DOWN can be	1		

	setting	modified, power-down with memory)			
		Analog AI1 setting	2		
		Analog AI2 setting	3		
		Panel potentiometer setting	4		
		High-speed pulse setting	5		
		Multi-speed operation setting	6		
		Simple PLC program setting	7		
		PID control setting	8		
		Remote communications setting	9		
		Analog AI3 setting	10		

The instructions for use refers to F0.03.

When the frequency source auxiliary setting is used as overlays reference (select frequency source as master+auxiliary , master to master+auxiliary or auxiliary to master+auxiliary), you need to pay attention to:

1) When the frequency source auxiliary setting is set to digital reference, the preset frequency (F0.01) does not work, user can adjust frequency by using ▲,▼ keys (or multi-function input terminals UP, DOWN) on the keyboard, adjust directly on the basis of master frequency source.

2) When the frequency source auxiliary setting is set to analog input reference (AI1, AI2, panel potentiometer) or pulse input reference, the frequency source auxiliary setting range for the set 100% can be set by F0.05 and F0.06.

3) When the frequency source is set to pulse input reference, it is similar to analog reference . Tip: Both master and auxiliary setting of frequency source can not be set in the same channel, ie F0.03 and F0.04 can not be set as the same value, otherwise easily lead to confusion.

F0.05	Reference object selection for frequency source auxiliary setting	Relative to maximum frequency	0	0	☆
		Relative to master frequency source A	1		
F0.06	Frequency source auxiliary setting range	0% to 150%	100%		☆

When the frequency source is set to "frequency overlay"(i.e. F0.07 is set to 1, 3 or 4), these two parameters are used to determine the range of adjustment of frequency source auxiliary setting.

F0.05 is used to determine the object corresponding to frequency source auxiliary setting range, either the maximum frequency or the frequency source master setting, If the frequency source master setting 1 is selected, so the frequency source auxiliary setting range will be subject to the change of the frequency source master setting, it applies for when auxiliary setting range is less than master setting range;

Recommendation: Frequency source master setting (F0.03) shall adopt analog setting, frequency source auxiliary setting (F0.04) shall adopt digital setting.

F0.07	Frequency source superimposed selection	Units digit	Frequency source selection	00	☆
		Frequency source master setting	0		
		Arithmetic result of master and auxiliary (arithmetic relationship depends on tens digit)	1		
		Switch between frequency source master setting and auxiliary setting	2		
		Switch between frequency source master setting and arithmetic result of master and auxiliary	3		
		Switch between frequency source auxiliary setting and arithmetic result of master and auxiliary	4		
		Tens digit	Arithmetic relationship of master and auxiliary for frequency source		

		Master+auxiliary	0		
		Master-auxiliary	1		
		Max(master, auxiliary)	2		
		Min (master, auxiliary)	3		

Frequency source reference is achieved by compounding frequency source master setting and frequency source auxiliary setting

Units digit: Frequency source selection:

0: Frequency source master setting

Frequency source master setting is used as command frequency

1: Arithmetic result of master and auxiliary is used as command frequency, for the arithmetic relationship of master and auxiliary, please see the instructions of function code "tens digit".

2: Switch between frequency source master setting and auxiliary setting, when multi-function input terminal 18 (frequency switching) is invalid, the frequency source master setting is selected as command frequency. when multi-function input terminal 18 (frequency switching) is valid, frequency source auxiliary setting is selected as command frequency.

3: Switch between the frequency source master setting and the arithmetic result of master and auxiliary, when multi-function input terminal 18 (frequency switching) is invalid, the frequency source master setting is selected as command frequency. When multi-function input terminal 18 (frequency switching) is valid, the arithmetic result of master and auxiliary is selected as command frequency.

4: Switch between the frequency source auxiliary setting and the arithmetic result of master and auxiliary, when multi-function input terminal 18 (frequency switching) is invalid, the frequency source auxiliary setting is selected as command frequency. When multi-function input terminal 18 (frequency switching) is valid, the arithmetic result of master and auxiliary is selected as command frequency.

Tens digit: Arithmetic relationship of master and auxiliary for frequency source

0: Frequency source master setting + frequency source auxiliary setting

The sum of frequency source master setting plus frequency source auxiliary setting is used as command frequency Achieve frequency overlay reference function.

1: Frequency source master setting - frequency source auxiliary setting

The difference of frequency source master setting minus frequency source auxiliary setting is used as command frequency

2: MAX (master and auxiliary) take the largest absolute value in frequency source master setting and frequency source auxiliary setting as command frequency.

3: MIN (master and auxiliary) take the smallest absolute value in frequency source master setting and frequency source auxiliary setting as command frequency. In addition, when the arithmetic result of master and auxiliary is selected as frequency source, you can set offset frequency by F0.08 and overlay offset frequency to the arithmetic result of master and auxiliary, so as to respond flexibly to various needs.

F0.08	Frequency source offset frequency when superimposing	0.00Hz to F0.19(Maximum frequency)	0.00Hz	☆

The function code is only valid when the arithmetic result of master and auxiliary is selected as frequency source.

When the arithmetic result of master and auxiliary is selected as frequency source, F0.08 is used as offset frequency, and it overlays with the arithmetic result of master and auxiliary as the set value of final frequency so that the frequency setting can be more flexible.

F0.09	Shutdown memory selection for digital set frequency	W/O memory	0	1	☆
		With memory	1		

This feature is only frequency source for the digital set.

"W/O memory" refers to that the digital set frequency value will recovered to F0.01 (preset frequency) value when the inverter stops, and the frequency correction by the ▲/▼ key on the keyboard or terminals UP, DOWN is cleared.

"W/ memory" refers to that the digital set frequency is reserved when the inverter stops, and the frequency correction by the ▲/▼ key on the keyboard or terminals UP, DOWN remains valid.

F0.10	Frequency command UP / DOWN reference when running	Running frequency	0	0	★
		Set frequency	1		

This parameter is valid only when the frequency source is the digital set value.

when determining the keyboard ▲ ▼ keys or terminal UP/DOWN action, the method to correct the set frequency that is, the target frequency decreases or increases on the basis of the operating frequency or the set frequency.

The obvious difference between two settings appears when the inverter is in the process of ac/deceleration, that is, if the inverter operating frequency is not same as the set frequency, the different choices of the parameters has very different effect.

F0.11	Command source selection	Keyboard control (LED off)	0	0	☆
		Terminal block control (LED on)	1		
		Communications command control (LED flashes)	2		

Select inverter control command input channel. Inverter control commands include: Start, stop, forward, reverse and jog, etc.

0: keyboard control ("LOCAL / REMOTE" lights out);

Operate command control by using RUN, STOP/RESET Keys on the operation panel.

1: Terminal block control ("LOCAL / REMOTE" lights up);

Operate command control by using multi-function input terminals FWD, REV or FJOG.

2: Communication command control("LOCAL / REMOTE" flashes)

Gives the run command from the host computer through the means of communication. Select this option, the optional communication card(Modbus card) is required .

F0.12	Binding frequency source for command source	Units digit	Keyboard command binding frequency source selection		000	☆
		Not binded		0		
		Keyboard set frequency		1		
		AI1		2		
		AI2		3		
		Panel potentiometer		4		
		High-speed pulse setting		5		
		Multi-speed		6		
		Simple PLC		7		
		PID		8		
		Communications reference		9		
		Tens digit	Terminal block command binding frequency source selection (0 to 9, same as units digit)			
		Hundreds digit	Communication command binding frequency source selection (0 to 9, same as units digit)			

Define the combination of 3 operation command channels and 9 frequency reference channels for easily synchronously switching.

The principle for above frequency source reference channel is same as frequency source master setting selection F0.03, please see the description of F0.03 function code. The different running command channel can be bundled with the same frequency reference channel. When command source has the available frequency source for bundling, in the valid period of command source , the set frequency source by F0.03 to F0.07 is no longer valid.

F0.13	Acceleration time 1	0.0s~6500s	-	☆
F0.14	Deceleration time 1	0.0s~6500s	-	☆

Acceleration time refers to the required time when the inverter accelerates from zero frequency to F0.16.

Deceleration time refers to the required time when the inverter decelerates from F0.16 to zero frequency.

PI550-E provides four groups of ac/deceleration time, user can select by using the digital input terminal DI, as follows:

The first group: F0.13, F0.14; The third group: F7.10, F7.11;

The second group: F7.08, F7.09; The fourth group: F7.12, F7.13.

F0.15	Ac/Deceleration time unit	1 second	0	1	★
		0.1 second	1		
		0.01 second	2		

To meet the demand of the various on-site, PI550-E provides three kinds of time unit: 1 second, 0.1 second and 0.01 second respectively.

Note: when modifying the function parameters, the number of decimal places that the four groups of ac/deceleration time displayed will change displayed, the ac/deceleration time will change accordingly.

F0.16	Ac/deceleration time reference frequency	Maximum frequency(F0.19)	0	0	★
		Set frequency	1		
		100Hz	2		

Ac/deceleration time refers to the required time from zero frequency to F0.16 or from F0.16 to zero frequency.

When F0.16 selects 1, the ac/deceleration time depends on the set frequency, if the set frequency change frequently, and the acceleration of the motor is varied, please use with caution.

F0.17	Carrier frequency adjustment as per temperature	NO	0	0	☆
		YES	1		

The adjustment of carrier frequency refers to that the inverter automatically adjusts the carrier frequency according to the radiator temperature, so as to reduce the carrier frequency .when the radiator temperature rises, and to restore the carrier frequency when the radiator temperature reduces.

F0.18	Carrier Frequency	0.5kHz to 16.0kHz	-	☆

This function is mainly used for improving the noise and vibration phenomena that the inverter operation may occur If the carrier frequency is higher, there are more ideal current waveform and less motor noise. It is very applicable in the place to be muted. But at this time, the switching loss of main components is large, the whole unit fevers, the efficiency decreases and the output reduces. At the same time, there is a bigger radio interference, another problem is that the capacitive leakage current increases when running at the high carrier frequency, the equipped leakage protective device may cause malfunction or overcurrent.

When running at the low carrier frequency, the above-mentioned phenomenon are opposite.

There are different responds to carrier frequency for the different motors. The best carrier frequency can be obtained based on the Actual situation adjustment. However, with the increase of motor capacity, the smaller carrier frequency should be selected. This company reserves the right to limit the maximum carrier frequency.

The adjustment of carrier frequency will have impacts on the following performances:

Carrier Frequency	Low → high
Motor noise	Large → small
Output current waveform	Poor → good
Motor temperature	High → low
Inverter temperature	Low → high
Leakage current	Small → large
External radiation and interference	Small → large

Note: The larger the carrier frequency, the higher the whole unit temperature

F0.19	Aximum output frequency	50.00Hz~320.00Hz	50.00Hz	★

If analog input, pulse input (DI5) or multi-stage command in PI550-E is selected as frequency source, the respective 100.0% is calibrated relative to the parameter.

When PI550-E maximum output frequency reaches up to 3200Hz, in order to take into account the two indexes of frequency command resolution and frequency input range, the number of decimal places for frequency command can be selected by F0.02 .

When F0.02 selects 1, the frequency resolution is 0.1Hz, at this time F0.19 can be set in the range from 50.0Hz to 3200.0Hz; When F0.02 selects 2, the frequency resolution is 0.01Hz, at this time F0.19 can be set in the range from 50.00Hz to 320.00Hz.

F0.20	Upper limit frequency source	F0.21 setting	0	0	★
		AI1	1		
		AI2	2		
		Panel potentiometer setting	3		
		High-speed pulse setting	4		
		Communications reference	5		
		F0.21 setting	6		

Setting upper limit frequency. The upper limit frequency can be set from either digital setting (F0.21) or analog input channels. If the upper limit frequency is set from analog input, the set 100% of analog input is relative to F0.19.

To avoid the "Runaway", the setting of upper limit frequency is required, when the inverter reaches up to the set upper limit frequency value, the inverter will remain operation at the upper limit frequency, no further increase.

F0.21	Upper limit frequency	F0.23 (Lower limit frequency) to F0.19 (Maximum frequency)	50.00Hz	☆
F0.22	Upper limit frequency offset	0.00Hz to F0.19 (Maximum frequency)	0.00Hz	☆

When the upper limit frequency is set from the analog or the high-speed pulse, F0.22 will be used as the offset of set value, the overlay of the offset frequency and F0.20 is used as the set value of the final upper limit frequency.

F0.23	Lower limit frequency	0.00Hz to F0.21 (Lower limit frequency)	0.00Hz	☆

When the frequency command is lower than the lower limit frequency set by F0.23, the inverter can shut down, and then run at the lower limit frequency or the zero speed, the running mode can be set by F7.18.

F0.24	Running direction	Same direction	0	0	☆
		Opposite direction	1		

By changing the parameters, the motor steering can be achieved without changing the motor wiring, which acts as the adjustment of any two lines(U, V, W) of the motor to achieve the conversion of the motor rotation direction.

Tip: After the parameter is initialized, the motor running direction will be restored to its original status. When the system debugging is completed, please use with caution where the change of motor steering is strictly prohibited.

F0.27	Inverter type	G type (Constant torque load type)	1	-	●

This parameter is only for users to view the factory models, and can not be changed.

5-2-3.Input terminal: F1.00-F1.46

PI550-E series inverter comes standard with eight multifunctional digital input terminals (where DI5 can be used as high-speed pulse input terminal), three analog input terminals.

Code	Parameter name	Setting range	Factory setting	Change
F1.00	DI1 terminal function selection	0～51	1	★
F1.01	DI2 terminal function selection	0～51	2	

F1.02	DI3 terminal function selection	0～51	8	
F1.03	DI4 terminal function selection	0～51	9	
F1.04	DI5 terminal function selection	0～51	12	
F1.05	DI6 terminal function selection	0～51	13	
F1.06	DI7 terminal function selection	0～51	14	
F1.07	DI8 terminal function selection	0～51	15	
F1.08	Undefined			
F1.09	Undefined			

These parameters are used to set the digital multi-function input terminal, the optional functions are shown in the following table:

Set value	Function	Description
0	No function	The terminal for not use can be set to "no function" to prevent accidental operation.
1	Forward run (FWD)	External terminals are used to control the FWD/REV run mode of inverter.
2	Reverse run (REV)	
3	Three-wire operation control	This terminal is used to determine the inverter's three-wire control mode. For details, please refer to the instructions of function code F1.10 ("terminal command mode).
4	Forward JOG(FJOG)	FJOG means Forward JOG running, RJOG means Reverse JOG running. For Jog running frequency and Jog Ac/deceleration time, please refer to the description of the function code F7.00, F7.01, F7.02.
5	Reverse JOG(RJOG)	
6	Terminal UP	Modify frequency increment/decrement command when the frequency is referenced by external terminal. Adjust up/down the set frequency when the digital setting is selected as the frequency source.
7	Terminal DOWN	
8	Free stop	The inverter output is blocked, at the time, the parking process of motor is not controlled by the inverter. This way is same as the principle of free stop described in F3.07.
9	Fault reset (RESET)	The function make use of terminal for fault reset. It has same function with RESET key on the keyboard. This function can be used to realize remote fault reset.
10	Run pausing	The inverter slows down and stops, but all operating parameters are memorized. Such as PLC parameters, wobbulate frequency parameters, and PID parameters. This terminal signal disappears, the inverter reverts to the previous state of running before parking.
11	External fault normally open input	When the signal is sent to the inverter, the inverter reports fault Err.15, and performs troubleshooting according to fault protection action (for details, please refer to the function code F8.17).
12	Multi-speed terminal 1	The setting of 16 stage speed or 16 kinds of other command can be achieved through the 16 states of the four terminals. For details, see Table 1
13	Multi-speed terminal 2	
14	Multi-speed terminal 3	
15	Multi-speed terminal 4	
16	Ac/deceleration time selection terminal 1	The selection of 4 ac/deceleration times can be achieved through the 4 states of the two terminals. For details, see Table 2
17	Ac/deceleration time	

	selection terminal 2	
18	Frequency source switching	Used to switch between different frequency sources. According to frequency source selection function code (F0.07) settings, the terminal is used to switch between two frequency sources.
19	UP/DOWN setting (terminal, keyboard)	When the frequency reference is the digital frequency, this terminal is used to clear the changed frequency value by terminal UP/DOWN or keyboard UP/DOWN, so that the reference frequency can recover to the set value of F0.01.
20	Run command switch terminal 1	When the command source is set to the terminal control (F0.11 = 1), the terminal can be used to switch between terminal control and keyboard control. When the command source is set to the communication control (F0.11 = 2), the terminal can be used to switch between communication control and keyboard control.
21	Ac/deceleration prohibited	Ensure the inverter is free from external signals affect (except for shutdown command), maintain current output frequency.
22	PID pause	PID is temporarily disabled, the inverter maintains current output frequency, no longer performs PID adjustment of frequency source.
23	PLC status reset	When PLC pauses and runs again, this terminal is used to reset the inverter to the initial state of simple PLC.
24	Wobbulate pause	When the inverter outputs at center frequency. Wobbulate will pause
25	Counter input	Input terminal of the count pulse
26	Counter reset	Clear counter status
27	Length count input	Input terminal of the length count.
28	Length reset	Clear length
29	Torque control prohibited	When the inverter torque control is prohibited, the inverter will enter speed control mode.
30	High-speed pulse input (only valid for DI5)	DI5 is used as pulse input terminal.
33	External fault normally closed input	When the signal of external fault normally closed input is inputted into the inverter, the inverter will report fault Err.15 and shutdown.
34	Frequency change enable	If the function is set to be valid, when the frequency changes, the inverter does not respond to frequency changes until the terminal state is invalid.
35	PID action direction as reverse	If the terminal is valid, PID action direction opposites to the direction set by E2.03
36	External parking terminal 1	Under keyboard control mode, the terminal can be used to stop the inverter, same as STOP key on the keyboard.
37	Control command switch terminal 2	Used to switch between terminal control and communication control. If the command source is selected as terminal control, the system will be switched to the communication control mode when the terminal is active; vice versa.
38	PID integral pause	When the terminal is active, the PID integral adjustment function is paused, but the proportion and differential adjustments of PID are still valid.
39	Switch between frequency source master	When the terminal is active, the frequency source A is replaced by the preset frequency (F0.01)

	setting and preset frequency	
40	Switch between frequency source auxiliary setting and preset frequency	When the terminal is active, the frequency source B is replaced with the preset frequency (F0.01)
43	PID parameter switching	When DI terminal (E2.19 = 1) is used to switch PID parameters, if the terminal is invalid, PID parameters use E2.13 to E2.15; if the terminal is valid, PID parameters use E2.16 to E2.18
44	Custom fault 1	When custom fault 1 and custom fault 2 are active, the inverter respectively alarms fault Err.27 and fault Err.28, and deals with them according to the mode selected by the fault protection action F8.19.
45	Custom fault 2	
46	Speed control / torque control switching	Switch between speed control mode and torque control mode under vector control mode. If the terminal is invalid, the inverter will run at the mode defined by FA.00 (speed/torque control mode); if the terminal is valid, the inverter will be switched to another mode.
48	External parking terminal 2	In any control mode (keyboard control, terminal control, communication control), the terminal can be used to decelerate the inverter until stop, at the time the deceleration time is fixed for deceleration time 4.
50	Clear current running time	If the terminal is valid, the inverter's current running time is cleared, the function needs to work with Timing run (F7.42) and current running time arrival(F7.45).

Table 1 Multi command functions description

Over 4 segments command terminal, can be combined into 16 states, each state corresponds to the 16 instruction set value. As shown in Table 1 below:

K4	K3	K2	K1	Command setting	Parameters
OFF	OFF	OFF	OFF	0-stage speed setting 0X	E1.00
OFF	OFF	OFF	ON	1-stage speed setting 1X	E1.01
OFF	OFF	ON	OFF	2-stage speed setting 2X	E1.02
OFF	OFF	ON	ON	3-stage speed setting 3X	E1.03
OFF	ON	OFF	OFF	4-stage speed setting 4X	E1.04
OFF	ON	OFF	ON	5-stage speed setting 5X	E1.05
OFF	ON	ON	OFF	6-stage speed setting 6X	E1.06
OFF	ON	ON	ON	7-stage speed setting 7X	E1.07
ON	OFF	OFF	OFF	8-stage speed setting 8X	E1.08
ON	OFF	OFF	ON	9-stage speed setting 9X	E1.09
ON	OFF	ON	OFF	10-stage speed setting 10X	E1.10
ON	OFF	ON	ON	11-stage speed setting 11X	E1.11
ON	ON	OFF	OFF	12-stage speed setting 12X	E1.12
ON	ON	OFF	ON	13-stage speed setting 13X	E1.13
ON	ON	ON	OFF	14-stage speed setting 14X	E1.14
ON	ON	ON	ON	15-stage speed setting 15X	E1.15

When multi-speed is selected as frequency source, the 100.0% of function code E1.00 to E1.15 corresponds to maximum frequency F0.19. Multi-stage command is used for the function of multi-speed, also for PID reference source to meet the need to switch between different reference values.

Table 2 - function description of ac/deceleration time selection terminal.

Terminal 2	Terminal 1	Ac/deceleration time selection	Parameters

OFF	OFF	Acceleration time 1	F0.13,F0.14
OFF	ON	Acceleration time 2	F7.08,F7.09
ON	OFF	Acceleration time 3	F7.10,F7.11
ON	ON	Acceleration time 4	F7.12,F7.13

F1.10	Terminal command mode	Two-wire type 1	0	0	★
		Two-wire type 2	1		
		Three-wire type 1	2		
		Three-wire type 2	3		

This parameter defines four different modes to control inverter operation through external terminals.0: Two-wire type 1

This mode is the most commonly used two-wire mode. The forward/reverse operation of motor is determined by terminal DIx, DIy.

The terminal function is set as follows:

Terminals	Set value	Description
DIx	1	Forward run (FWD)
DIy	2	Reverse run (REV)

Of which, DIx and DIy are the multi-function input terminals of DI1 to DI10, the level is active.

K1	K2	Run Command
0	0	Stop
0	1	Reverse
1	0	Forward
1	1	Stop

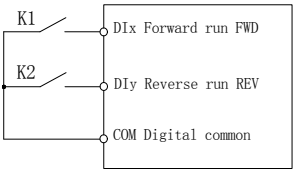

Figure5-3:Terminal command mode: Two wire mode 1

1: Two-wire type 2 In the mode, DIx terminal is used as running enabled, while DIy terminal is used to determine running direction.The terminal function is set as follows:

Terminals	Set value	Description
DIx	1	Forward run (FWD)
DIy	2	Reverse run (REV)

Of which, DIx and DIy are the multi-function input terminals of DI1 to DI10, the level is active.

K1	K2	Run Command
0	0	Stop
0	1	Stop
1	0	Forward
1	1	Reverse

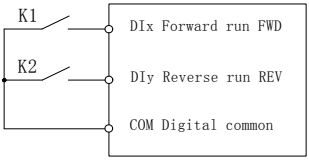

Figure5-4:Terminal command mode: Two wire mode 2

2: Three-wire control mode 1. In the mode, DIn is used as enabled terminal, while DIx, DIy terminal are used to control direction. The terminal function is set as follows:

Terminals	Set value	Description
DIx	1	Forward run (FWD)
DIy	2	Reverse run (REV)
DIn	3	Three-wire operation control

To run, firstly close DIn terminal, the forward or reverse of motor is controlled by the ascendant edge of DIx or DIy pulse

To stop, you must disconnect DIn terminal signals Of which, DIx, DIy and DIn are the multi-

function input terminals of DI1 to DI10, DIx and DIy are for active pulse, DIn is for active level.

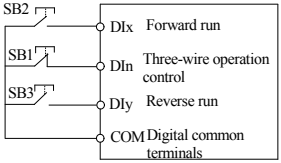

Figure5-5:Three-wire control mode 1

Of which:SB1: Stop button SB2: Forward button SB3: Reverse button

3: Three-wire control mode 2

In the mode, DIn is the enabled terminal, the running commands are given by DIx, the direction is determined by the state of DIy.

The terminal function is set as follows:

Terminals	Set value	Description
DIx	1	Forward run (FWD)
DIy	2	Reverse run (REV)
DIn	3	Three-wire operation control

To run, firstly close DIn terminal, the motor run signal is generated by the ascendant edge of DIx, the motor direction signal is generated by DIy status

To stop, you must disconnect DIn terminal signals Of which, DIx, DIy and DIn are the multi-function input terminals of DI1 to DI10, DIx is for active pulse, DIy and DIn are for active level

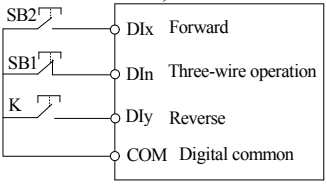

K	Command
0	FWD
1	REV

Figure5-6:Three-wire control mode 2

Of which: SB1: Stop button SB2: Run button

F1.11	Terminal UP / DOWN change rate	0.001Hz/s～65.535Hz/s	1.000Hz/s	☆

Used to set terminal UP/DOWN adjustment frequency, the rate of frequency change, i.e. frequency change amount per second.

When F0.02 (frequency decimal point) is 2, the value range is 0.001Hz/s to 65.535Hz/s.

When F0.22 (frequency decimal point) is 1, the value range is 0.01Hz/s to 655.35Hz/s.

F1.12	Minimum input for AIC1	0.00V～F1.14	0.00V	☆
F1.13	F1.12 corresponding setting	-100.0%～100.0%	0.0%	☆
F1.14	Maximum input for AIC1	F1.12～+10.00V	10.00V	☆
F1.15	F1.14 corresponding setting	-100.0%～100.0%	100.0%	☆

The above function codes are used to set the relationship between analog input voltage and its representatives set value.

When the analog input voltage is more than the set Maximum Input (F1.14), the analog voltage takes the Maximum Input as the calculated value, Similarly, when the analog input voltage is less than the set Minimum Input (F1.12), according to the Setting Selection For AI Less Than Minimum Input (F1.25), the analog voltage takes Minimal Input or 0.0% as the calculated value.

When the analog input is the current input, 1mA current is equivalent to 0.5V voltage.

AI1 input filter time is used to set AI1 software filter time, When the on-site analog quantity is easily interfered, please increase the filter time to stabilize the detected analog quantity, but the

greater filter time, the slower analog detection response, the proper setting method depends on the actual application.

In the different applications, the 100.0% of analog setting vary from the meaning of its corresponding nominal value, please refer to the description of each application for details.

The three legends are for two typical settings.

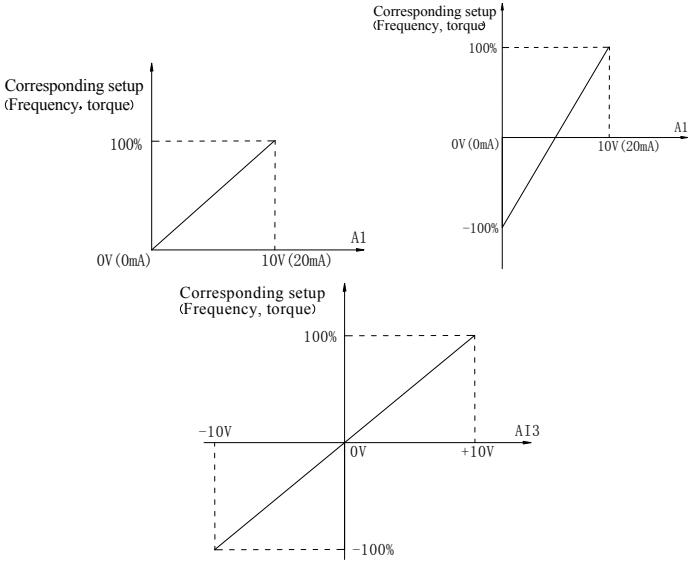

Figure5-7:Relationship between analog reference and set amount

F1.16	Minimum input for AIC2	0.00V～F1.18	0.00V	☆
F1.17	F1.16 Corresponding to the set	-100.0%～100.0%	0.0%	☆
F1.18	AIC2 max. input	F1.16～+10.00V	10.00V	☆
F1.19	F1.18 Corresponding to the set	-100.0%～100.0%	100.0%	☆
For the function and use of curve 2, please refer to the description of curve 1.				
F1.20	Minimum input for AIC3	-10.00V～F1.22	-10.00V	☆
F1.21	F1.20 Corresponding to the set	-100.0%～100.0%	0.0%	☆
F1.22	AIC3 Maximum input	F1.20～+10.00V	10.00V	☆
F1.23	F1.22 Corresponding to the set	-100.0%～100.0%	100.0%	☆
For the function and use of curve 3, please refer to the description of curve 1.				

F1.24	AI curve selection	Units digit	AI1 curve selection	321	☆
		Curve 1(2 points,refere to F1.12~F1.15)	1		
		Curve 2(2 points,refere to F1.16~F1.19)	2		
		Curve 3(2 points,refere to F1.20~F1.23)	3		
		Tens digit	AI2 curve selection (1-3, the same as the units digit)		
		Hundreds digit	Panel encoder curve selection (1-3, the same as the units digit)		
Units digit, tens digit and hundreds digit of the function code are used to respectively select					

the corresponding set curves of analog input AI1, AI2, Panel potentiometer
3 analog input can respectively select any one of 3 curves.
Curve 1, curve 2 and curve 3 are 2-point curve, they are set in F1 function code.

F1.25	AI input setting selection	Units digit	AI1 Below the minimum input setting selection	000	☆
		Corresponding to the minimum input set	0		
		0.0%	1		
		Tens digit	Setting selection for AI2 less than minimum input(0 to 1, ditto)		
		Hundreds digit	Setting selection for panel potentiometer less than minimum input(0 to 1, ditto)		

The function code is used to set analog quantity and its corresponding setting when the analog input voltage is less than the set Minimum Input.

Units digit, tens digit and hundreds digit the function code respectively correspond to the analog input AI1, AI2, panel potentiometer. If 0 is selected, when the analog input is less than the Minimum Input, the setting corresponding to the analog amount is the setting of minimum input of the function code curve (F1.13, F1.17, F1.21).

If 1 is selected, when the analog input is less than the minimum input, the setting corresponding to the analog amount is 0.0%.

F1.26	HDI Minimum input	0.00kHz～F1.28	0.00kHz	☆
F1.27	F1.26 Corresponding to the set	-100.0%～100.0%	0.0%	☆
F1.28	HDI Maximum input	F1.26～100.00kHz	50.00kHz	☆
F1.29	F1.28 Corresponding to the set	-100.0%～100.0%	100.0%	☆

This group function code is used to set the relationship between DI5 pulse frequency and its corresponding setting.

Pulse frequency can be inputted into the inverter only through DI5 channel. The application on this group of functions is similar to curve 1, please refer to the description of curve 1.

F1.30	DI filter time	0.000s～1.000s	0.010s	☆

Set software filter time for DI terminals status. For the application that input terminals are vulnerable to interference and cause the accidental operation, you can increase this parameter so as to enhance the anti-interference ability. However, the increase of filter time will cause DI terminal slow response.

F1.31	AI1 filter time	0.00s～10.00s	0.10s	☆
F1.32	AI2 filter time	0.00s～10.00s	0.10s	☆
F1.33	Panel encoder/AI3 filter time	0.00s～10.00s	0.10s	☆
F1.34	HDI filter time	0.00s～10.00s	0.00s	☆

F1.35	DI terminal Mode Selection 1	Units digit	DI1 Terminal active state set	00000	★
		high level active	0		
		Low level active	1		
		Tens digit	DI2 Terminal active state set (0~1,same as the units digit)		
		Hundreds digit	DI3 Terminal active state set (0~1,same as the units digit)		

		Thousands digit	DI4 Terminal active state set (0~1,same as the units digit)		
		Ten thousands digit	DI5 Terminal active state set (0~1,same as the units digit)		
F1.36	DI terminal mode selection 2	Units digit	DI6 Terminal active state set	00000	★
		high level active	0		
		Low high level active	1		
		Tens digit	DI7 Terminal active state set (0~1,same as the units digit)		
		Hundreds digit	DI8 Terminal active state set (0~1,same as the units digit)		
		Thousands digit	DI9 Terminal active state set (0~1,same as the units digit)		
		Ten Thousands digit	DI10 Terminal active state set (0~1,same as the units digit)		
For setting the digital input terminal of the active mode. When selecting high effective, appropriate DI terminal and COM communicated effectively, disconnect invalid. Select is low effective, appropriate DI terminal and COM connectivity invalid, disconnect effective.					
F1.37	DI1 delay time	0.0s～3600.0s		0.0s	★
F1.38	DI2 delay time	0.0s～3600.0s		0.0s	★
F1.39	DI3 delay time	0.0s～3600.0s		0.0s	★
DI terminal for setting status changes, changes in the delay time of the inverter. Currently only DI1, DI2, DI3 with delay time setting function.					
F1.42	Keyboard potentiometer X2	0～100.00%		0.50%	☆
Keyboard potentiometer set value end point					

5-2-4.Output terminal group: F2.00-F2.19

Code	Parameter name	Setting range		Factory setting	Change
F2.00	SPB terminal output selection	High speed pulse output	0	0	☆
		Switching output	1		
SPB terminals are programmable multiplex terminal can be used as high-speed pulse output terminal, it can also be used as open collector output terminal. As a high-speed pulse output, the maximum frequency of the output pulse is 100kHz, high-speed pulse output of the correlation function refer to Note F2.06.					
F2.01	Switching quantity output function selection (Open collector output terminal)		0~40	0	☆
F2.02	Relay 1 output function selection (TA1.TB1.TC1)		0~40	2	☆
F2.03	Undefined				
F2.04	SPA output function selection (Collector open circuit output terminals)		0~40	1	☆
F2.05	Relay 2 output function selection (TA2.TB2.TC2)		0~40	1	☆
Above 5 function code is used to select five digital output function. Multifunctional output terminal functions are as follows:					

Setting value	Functions	Description

0	No output	No output action
1	Inverter running	Inverter is in running state, the output frequency (Can be zero), the output ON signal.
2	Fault output (fault down)	When the drive fails and downtime, the output ON signal.
3	Frequency level detection FDT1 output	Please refer to the function code F7.23, F7.24's instructions.
4	Frequency arrival	Please refer to the description of function code F7.25.
5	Zero-speed running (No output when shutdown)	Inverter operation and the output frequency is 0, output ON signal. When the drive is shut down, the signal is OFF.
6	Motor overload pre-alarm	Before the motor overload protection, according to the overload pre-alarm threshold value judgment, more than the pre-alarm threshold value output ON signal. Motor overload parameter settings refer to the function code F8.02 ~ F8.04.
7	Inverter overload pre-alarm	Before the inverter overload occurs 10s, output ON signal.
8	Setup counter arrive	Setup counter arrive When the count reaches the set value of E0.08, output ON signal.
9	Specifies the count value reaches	Specifies the count value reaches When the count reaches the set value of E0.09, output ON signal. Counting Function Reference E0 group
10	Length arrival	When the actual length of the detection of more than E0.05 set length, output ON signal.
11	PLC cycle is complete	After simple PLC completes one cycle, the output of a pulse width of 250ms signal.
12	Total running time arrival	Inverter total running time of more than F7.21 F6.07 set time, the output ON signal.
13	Limited in frequency	When the set frequency exceeds the upper limit frequency or lower frequency, and output frequency is beyond the upper limit frequency or lower limit frequency, output ON signal.
14	Torque limiting	Drive under the speed control mode, when the output torque reaches the torque limit, the inverter is stall protection status, while the output ON signal.
15	Ready to run	When the inverter main circuit and control circuit power supply has stabilized, and the drive does not detect any fault information, the drive is in an operational state, output ON signal.
16	AI1>AI2	When the value of the analog input AI is greater than the value of AI2 input and output ON signal.
17	Upper frequency arrival	When the operating frequency reaches the upper frequency, output ON signal.
18	The lower frequency arrival (No output when shutdown)	When the operating frequency reaches the lower frequency, output ON signal. The next stop status signal is OFF.
19	Under voltage state output	When the inverter is in an under-voltage condition, output ON signal.
20	Communication setting	Refer to the communication protocol.
23	Zero-speed operation 2 (shutdown also output)	The inverter’s output frequency is 0, output ON signal. The signal is also ON when shutdown.
24	Cumulative power-on time arrival	When the inverter's accumulated power on time (F6.08) over F7.20 the set time, the output ON signal.

25	Frequency level detection FDT2 output	Please refer to the function code F7.26, F7.27's instructions.
26	Frequency 1 reaches output	Please refer to the function code F7.28, F7.29's instructions.
27	Frequency 2 reaches output	Please refer to the function code F7.30, F7.31's instructions.
28	Current 1 reaches output	Please refer to the function code F7.36, F7.37's instructions.
29	Current 2 reaches output	Please refer to the function code F7.38, F7.39's instructions.
30	Timing reach output	When the timer function selection (F7.42) is valid, the drive time to reach this run after the set time runs out, output ON signal.
31	AI1 input overrun	When the value of analog input AI1 greater than F7.51 (AI1 input protection limit) or less than F7.50 (AI1 input protection under), output ON signal.
33	Reverse operation	Inverter in reverse run, output ON signal
34	0 current state	Refer to the description of function code F7.32, F7.33.
35	Module temperature reaches	Inverter module heatsink temperature (F6.06) reach the set module temperature reaches value (F7.40), output signal ON.
36	Software current limit	Please refer to the function code F7.34, F7.35's instructions.
37	The lower frequency arrival (stop and output)	When the operating frequency reaches the lower limit frequency, output ON signal. In shutdown state of the signal is also ON.
38	Alarm output	When the inverter failure, and the failure of the process to continue to run mode, the inverter alarm output.
39	Motor over-temperature pre-warning	When the motor temperature reaches F8.35 (motor overheat pre-alarm threshold), the output ON signal. (Motor temperature can be viewed at d0.41)
40	Current running time of arrival	When the inverter starts running time is longer than the time set by F7.45, it outputs ON signal.

F2.06	High-speed pulse output function selection	0~17	0	☆
F2.07	DA1 output function selection	0~17	2	☆
F2.08	DA2 output function selection	0~17	13	☆

High-speed pulse output frequency range of 0.01kHz ~ F2.09 (high speed pulse output maximum frequency), F2.09 can be set between 0.01kHz ~ 100.00kHz.

Analog Output DA1 and DA2 output range is 0V ~ 10V, or 0mA ~ 20mA. Pulse output or analog output range, with the corresponding scaling function relationship in the following table:

Setting value	Functions	Description
0	Running frequency	0~Max. output frequency
1	Set frequency	0~ Max. output frequency
2	Output current	0~2 times the motor rated current
3	Output torque	0~2 times the motor rated toqure
4	Output power	0~2 times rated power
5	Output voltage	0~1.2 times inverter rated voltage
6	High speed pulse input	0.01kHz~100.00kHz
7	Analog AI1	0V~10V（Or 0～20mA）
8	Analog AI2	0V~10V(or 0~20mA)
9	Analog AI3	0V～10V
10	Length value	0~Max. setting length
11	The count value	0~Max. count value

12	Communication set	0.0%~100.0%
13	Motor speed	0~Max. output frequency correspondent speed
14	Output current	0.0A~100.0A (Inverter power≦55kW); 0.0A~1000.0A (Inverter power>55kW)
15	DC bus voltage	0.0V~1000.0V
16	Reserve	Reserve
17	Frequency source main set	0~Max. output frequency

F2.09	Maximum frequency of high-speed pulse	0.01kHz~100.00kHz	50.00kHz	☆

When the SPB terminal as a pulse output, the function code is used to select the maximum output pulse frequency value.

F2.10	SPB output delay	0.0s~3600.0s	0.0s	☆
F2.11	Relay 1 output delay time	0.0s~3600.0s	0.0s	☆
F2.12	Expansion card DO output delay time	0.0s~3600.0s	0.0s	☆
F2.13	SPA output delay time	0.0s~3600.0s	0.0s	☆
F2.14	Relay 2 output delay time	0.0s~3600.0s	0.0s	☆

Set the output terminal SPA, SPB, relay 1, relay 2, delay time of changing from the state produced to the actual output differentiated.

F2.15	DO terminal active status selection	Units digit	SPB switching active status selection	00000	☆
		Positive	0		
		Negative	1		
		Tens digit	Relay 1 active setting (0 to 1, as defined in units digit)		
		Hundreds digit	Reserve		
		Thousands digit	SPA Terminal active state settings (0 to 1, as defined in units digit)		
		Tens thousand digit	Relay 2 active setting (0 to 1, as defined in units digit)		

Define the output terminal SPA, SPB, relay 1, relay 2 output logic.

0: positive, digital output terminal and the corresponding public terminal connectivity to the active state, disconnecting is inactive state;

1: N egative, digital output terminal and the corresponding public terminal connectivity to the inactive state, disconnecting is active state.

F2.16	DA1 zero bias coefficient	-100.0%~+100.0%	0.0%	☆
F2.17	DA1 gain	-10.00~+10.00	1.00	☆
F2.18	DA2 zero bias coefficient	-100.0%~+100.0%	20.0%	☆
F2.19	DA2 gain	-10.00~+10.00	0.80	☆

The above function codes generally used to bias the output amplitude of zero drift and correcting the analog output. It can also be used to customize the desired analog output curve.

Calculation relationship with DA1 example:

y1 represents DA1 minimum output voltage or current value; y2 represents DA1 maximum output voltage or current value

y1=10V or 20mA*F2.16*100%;

y2=10V or 20mA*(F2.16+F2.17);

Factory Default F2.16 = 0.0%, F2.17 = 1, so the output 0 ~ 10V (or 0 ~ 20mA) corresponding to characterize the physical minimum value to characterize the physical maximum.

Example 1:

0 ~ 20mA output will be changed to 4 ~ 20mA

The minimum input current value from the formula: y1 = 20mA * F2.16 * 100%,

4=20*F2.16, calculated according to the formula F2.16=20%;

Maximum input current value by the formula:y2=20mA*(F2.16+F2.17);
20=20*(20%+F2.17),calculated according to the formula F2.17=0.8
Example 2:
0 ~ 10V output will be changed to 0 ~ 5V
The minimum input voltage value from the formula:y1=10*F2.16*100%;
0=10*F2.16, calculated according to the formula F2.16=0.0%;
The maximum input voltage value from the formula: y2=10*(F2.16+F2.17);
5=10*(0+F2.17),calculated according to the formula F2.17=0.5

5-2-5.Start and stop control group: F3.00-F3.15

Code	Parameter name	Setting range		Factory setting	Change
F3.00	Start-up mode	Direct start-up	0	0	☆
0: Directly start-up, inverter start running from starting frequency.					
F3.03	Start frequency	0.00Hz~10.00Hz		0.00Hz	☆
F3.04	Hold time for start frequency	0.0s~100.0s		0.0s	★

When the inverter starts, firstly run at the start frequency, the running time is the hold time for start frequency, afterwards run at the frequency reference.

The start frequency F3.03 is not limited by the lower limit frequency. But if the set target frequency is less than the start frequency, the inverter does not start and keeps in the standby state.

The hold time for start frequency is inactive when switching between forward rotation and reverse rotation The hold time for start frequency is not included in the acceleration time, but the simple PLC run-time. Example 1:

F0.03＝0 the frequency source is set to digital reference
F0.01＝2.00Hz the digital set frequency is 2.00Hz
F3.03＝5.00Hz the start frequency is 5.00Hz
F3.04＝2.0s the hold time for start frequency is 2.0s, at this time, the inverter will be in the standby state with the output frequency of 0.00Hz.

Example 2:

F0.03＝0 the frequency source is set to digital reference
F0.01＝10.00Hz the digital set frequency is 10.00Hz
F3.03＝5.00Hz the start frequency is 5.00Hz
F3.04＝2.0s the hold time for start frequency is 2.0s

At this point, the inverter accelerates to 5.00Hz for 2.0s, and then accelerates to the reference frequency of 10.00Hz.

F3.07	Stop mode	Deceleration stop	0	0	☆
		Free stop	1		
F3.08	DC Initial frequency	0.00Hz~F0.19 (Maximum-frequency)		0.00Hz	☆
F3.09	DC waiting time	0.0s~100.0s		0.0s	☆
F3.10	Stop braking current	0%~100%		0%	☆
F3.12	Braking utilization rate	0%~100%		100%	☆
F3.13	Ac/deceleration mode	Linear acceleration and deceleration	0	0	★
		S curve acceleration and deceleration A	1		

Select the frequency change mode in the process of start/stop.

0: Linear acceleration and deceleration

The output frequency increases or decreases linearly. PI550-E provides four kinds of acceleration and deceleration time. You can select by the multi-function digital input terminals (F1.00 to F1.08).

1: S curve acceleration and deceleration A

The output frequency increases or decreases at the S curve. S-curve is used for the occasion

that requires to gently start or stop, such as elevators, conveyor belts, etc..The function code F3.14 and F3.15 respectively defined the proportion of S curve start-section and the proportion of S curve end-section

F3.14	Proportion of S curve start-section	0.0%~(100.0%~F3.15)	30%	★
F3.15	Proportion of S curve end-section	0.0%~(100.0%~F3.14)	30%	★

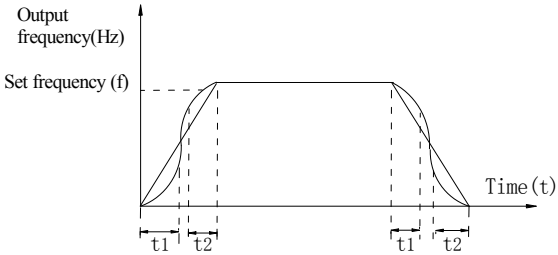

Figure5-8:Schematic diagram of S curve ac/deceleration A

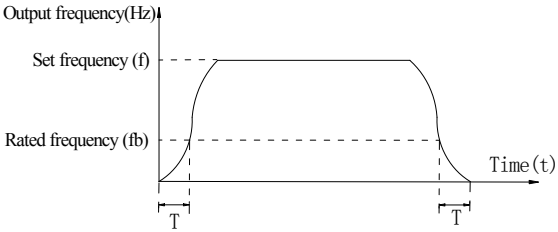

Figure5-9:Schematic diagram of S curve ac/deceleration B

The function code F3.14 and F3.15 respectively defined the proportion of start-section and the proportion of end-section for S curve acceleration and deceleration A,the two function code must meet: F3.14 + F3.15 ≤ 100.0%.

In the Figure of the S-curve acceleration and deceleration A, t1 is the time parameter defined by F3.14, the slope of the output frequency variation during this period is gradually increasing. t2 is the time parameter defined by F3.15, the slope of the output frequency variation during the period is gradually changed to 0. Within the time between t1 and t2, the slope of the output frequency variation is fixed, i.e. the linear acceleration and deceleration is achieved in this interval.

5-2-6.Vector control parameters: F5.00-F5.48

F5 function code is only valid to vector control, invalid to V/F control

Code	Parameter name	Setting range	Factory setting	Change
F5.00	Proportion of speed loop G1	1~100	30	☆
F5.01	Speed loop integral T1	0.01s~10.00s	0.50s	☆
F5.02	Switching frequency 1	0.00~F5.05	5.00Hz	☆
F5.03	Proportion of speed loop G2	1~100	20	☆
F5.04	Speed loop integral T2	0.01s~10.00s	1.00s	☆
F5.05	Switching frequency 2	F5.02~F0.19(Max frequency)	10.00Hz	☆

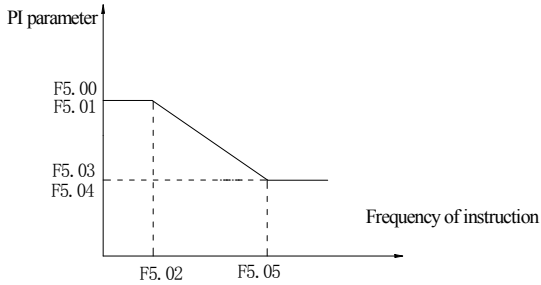

Figure5-10:PI parameter diagram

Converter operating in different frequency can choose different speed ring PI parameters. Operating frequency is less than the switching frequency 1 (F5.02), speed ring PI control parameters for F5.00 and F5.01. Operating frequency is greater than the switching frequency 2 (F5.05), speed in PI control parameters for F5.03 and F5.04. The speed ring PI parameters of switching frequency 1 and switching frequency 2 are for the two groups of PI parameter linear switching, as shown in figure:

Through the set speed regulator proportion coefficient and the integral time, can adjust the speed of the vector control dynamic response characteristics.

Gain take large, quick response, but will produce oscillation; Gain take hours, response lag.

Integral time is too large, slow response, external interference control variation; Integral time hours, reaction speed, small happen oscillation.

Set this value to considering the control stability and response speed, if the factory parameters can't meet the requirements in the factory value based on parameter adjustment, first increase proportion gain to ensure that the system is not oscillation; Then reduced integration time, make the system has faster response, small overshoot and.

Note: if the PI parameters Settings, may lead to excessive speed overshoot. Even in overshoot back occurs when overvoltage fault.

F5.06	Speed loop integral	Valid	0	0	☆
		Invalid	1		
F5.07	Torque limit source under speed control mode	Function code F5.08 setting	0	0	☆
		AI1	1		
		AI2	2		
		Panel potentiometer setting	3		
		High-speed pulse setting	4		
		Communication setting	5		
		Min(AI1, AI2)	6		
		Max(AI1, AI2)	7		
		AI3 setting	8		
F5.08	Upper limit digital setting for lower torque under speed control mode	0.0% to 200.0%		150.0%	☆

In speed control mode, the maximum value of inverter output torque is controlled by the torque upper limit source.

F5.07 is used to select the setting source of torque upper limit, when it is set by analog, high-speed pulse or communication, the set 100% corresponds to F5.08, the 100% of F5.08 is the inverter's rated torque.

F5.09	Vector control differential gain	50% to 200%	150%	☆

For the sensorless vector control, the parameter can be used to adjust the motor speed and stability: if the speed of motor with load is low, increases the parameter and vice versa decreases.

F5.10	Speed loop filter time constant	0.000s~0.100s	0.050s	☆

Under vector control mode, properly increases the filter time when speed fluctuate wildly; but

do not excessively increases, or the lag effect will cause shock.

F5.11	Vector control over excitation gain	0~200	64	☆

In the process of the inverter's deceleration, the over-excitation control can suppress the rise of bus voltage to avoid over-voltage fault. The greater over excitation gain, the stronger the inhibitory effect.

For the occasions that the inverter's deceleration easily cause over pressure alarm , the over excitation gain needs to be improved. But if over excitation gain is too large, which easily lead to the increase of output current, you need to weigh in practical applications.

For the small inertia occasions that the inverter's deceleration will not cause voltage rise, it is recommended to set over excitation gain as 0; the set value is also suitable for the occasions with braking resistor.

F5.12	Excitation regulator proportional gain	0~60000	2000	☆
F5.13	Excitation regulator integral gain	0~60000	1300	☆
F5.14	Torque regulator proportional gain	0~60000	2000	☆
F5.15	Torque regulator integral gain	0~60000	1300	☆

The regulator parameters of vector control current loop PI, the parameter will be obtained automatically after performing asynchronous motor parameters comprehensive auto tuning or synchronous motor parameters comprehensive auto tuning and generally do not need to modify it.

It is reminded that the dimension that this current loop integral gain adopted is not the integration time, but the direct set integral gain. Therefore, if the setting of current loop PI gain is too large, which may cause the oscillation of entire control loop, in the event of oscillation, you can manually reduce PI proportional gain and integral gain.

F5.16	Synchronous machine weak magnetic mode	No weakening magnetic mode	0	1	☆
		Automatic adjustment mode	1		
		Computation + auto-adjustment synthesis mode	2		
F5.17	Synchronous machine weak magnetic gain	0～50		5	☆
F5.18	Synchronous machine output voltage limit Margin	0～300%		50%	★

The parameters are used for synchronous machine weakening magnetic control.

F5.16=0 No weakening magnetic mode

Synchronous machine does not perform weakening magnetic control. At this time, the maximum value of the motor speed can be related to the inverter’s bus voltage. The advantage is that there is no weakening magnetic current and the output current is small. The disadvantage is that the operating frequency cannot reach the set frequency, if customer wishes to achieve higher speeds require the weakening magnetic function to be turned on.

（2） F5.16=1 Automatic adjustment mode

This kind of weakening magnetic method is simple and reliable. The higher the speed is, the weaker the magnetic current is. When the rated current of the motor is reached, it is not allowed to increase the speed anymore. Otherwise, it will be overloaded if it is running for a long time. If it is required to be quickly and weakly magnetized, the synchronous machine may be appropriately increased by Weak magnetic coefficient F5.17, but excessive F5.17 will caused current instability.

（3）F5.16=2 Computation + auto-adjustment synthesis mode

In this mode, the flux-weakening current is adjusted faster, this mode can be set when the auto-tuning cannot meet the demand. However, this mode depends on the motor parameter value, and the stability is not as good as mode 1.

After entering the field weakening, if the output voltage is expected to be higher, so that the field weakening current can be made smaller, the output voltage saturation margin F5.18 of the synchronous machine can be appropriately reduced, but if F5.18 is too small, the output voltage is more likely to be saturated and the control performance will be affected.

F5.24	Synchronous machine initial position angle detection current	50～180%		80%	☆
F5.25	Synchronous machine initial position angle detection	Detect every time	0	0	☆
		No detecting	1		
		Detect for 1st time power-on	2		

The initial position angle detection is generally used for SVC. The advantage is that it does not appear to reverse when starting, the disadvantage is that there is a certain noise. For applications that don't allow reverse when starting and the position of the motor rotor will be changed after stopping, F5.25 must be set to 0, other applications it can be set to 1 or 2.

FVC is detected only in the case of ABZ encoder and is powered on for the first time. It is recommended not to modify it. Otherwise, there may be risk of flying. The detection current can be set through F5.24, the smaller the detection current, the smaller the noise during detection. But if the detection current is too small may result in inaccurate position detection, it is recommended not to change in FVC mode.

F5.27	Synchronous salient rate adjustment gain	50～500	100	☆
F5.28	Maximum torque current ratio control	0: Off;1: On	0	☆

This set of function codes is only valid when it is under the FVC control and the motor is the convex permanent magnet synchronous motor. The so-called convex permanent magnet synchronous motor is generally a plug-in type permanent magnet synchronous motor, and the judgment basis is b0.12/b0.13>1.5. After confirming as the motor, set F2-28 to 1 will decrease the output current under the same load. If F5.28 is set to 1, the output current will not decrease or even increase when the same load is applied, can adjust parameter F2-27 until the output current is minimum.

F5.32	Z signal correction	0: Off; 1: On	1	☆

This function code is only meaningful if the encoder is an incremental encoder. By default, Z signal correction is enabled to eliminate the accumulated position deviation. If there are some occasions where the interference to the encoder Z signal is relatively large, it will cause motor flying or the motor to deteriorate. In severe cases, it may even report Err.20 encoder failure. At this time, F2-32 can be set to 0 to cancel the Z signal correction. After canceling the Z signal correction, Err.20 will not be reported, but if the AB signal is interfered by the outside world (in general, the Z signal is more susceptible to interference), or there are cumulative errors due to other reasons, it may end up flying. The best solution is to separate the encoder line from the power line, remove the interference source, and increase the encoder magnetic ring, to reduce the interference on the encoder signal.

F5.37	Low speed carrier frequency	0.8K～F0.18（Carrier frequency）		1.5K	☆
F5.38	SVC low frequency brake mode	No action	0	0	☆
		Action when decelerating stop	1		
F5.39	SVC low frequency braking effective frequency	0～10.00Hz		2.00Hz	☆
F5.40	SVC low frequency brake frequency step-length change	0.0005～1.0000Hz		0.0010Hz	☆
F5.41	SVC low frequency brake current	0～80%		50%	☆

This set of function codes is used for SVC low frequency braking. In the case where a small reversal is not allowed when the motor is stopped, the low-frequency brake can be selected, which is similar to the DC braking effect of the asynchronous machine.

When F5.38=1 and the state is deceleration stop, once the running frequency is lower than F5.39, low frequency braking will be used to prevent reverse rotation when the motor stops.

F5.47	Prohibit reversal when stopping	0: Allowed; 1: prohibited	0	☆

F5.48	Stop angle	0.0°～10.0°	0.8°	☆
Setting F5.47 to 1 under FVC can prevent the inverter from reversing when it stops or decelerates to 0Hz. F5.48 defaults as 0.8°. If with the default it still occurs reverse, F5.48 can be properly increased, until no inversion occurs				

5-2-7.Keyboard and display: F6.00-F6.19

Code	Parameter name	Setting rang		Factory setting	Change
F6.00	STOP/RESET key functions	STOP/RESET key is enabled only under keyboard operation mode	0	1	☆
		STOP/RESET key is enabled under any operation mode	1		
F6.01	Running status display parameters 1	0000 to FFFF			☆

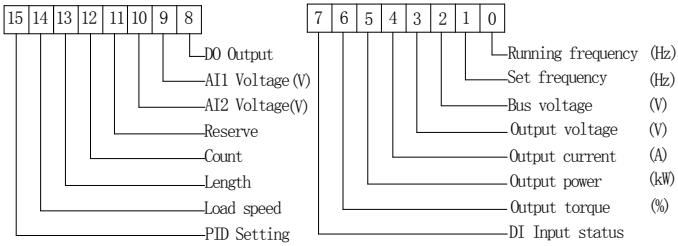

Figure5-11:The figure is the running status 1

If the above parameters need to be displayed in operation, firstly set its position to 1, and then set at F6.01 after converting the binary number to the hexadecimal number.

For example,If the load speed need to be displayed in operation,the 14th in F6.01 should be setting to 1, if the AI voltage need to be displayed in operation, the 9th in F.6.01 should be setting to 1 . If all of the related position are setting to 1 per the requirement, the data are show as follow:

tag number	15	14	13	12	11	10	9	8	7	6	5	4	3	2	1	0
number	0	1	1	1	1	0	1	0	0	1	0	0	1	1	1	1

The data will divided to 4 group,

tag number	15-12	11-8	7-4	3-0
number	0111	1010	0100	1111

After check the comparison of the binary number and the hexadecimal number.the data is 0x7A4F.

Binary	Hexadecimal	Binary	Hexadecimal	Binary	Hexadecimal	Binary	Hexadecimal
0000	0	0100	4	1000	8	1100	C
0001	1	0101	5	1001	9	1101	D
0010	2	0110	6	1010	A	1110	E
0011	3	0111	7	1011	B	1111	F

F6.02	Running status display parameters 2	0x0000~0xFFFF	0000	☆

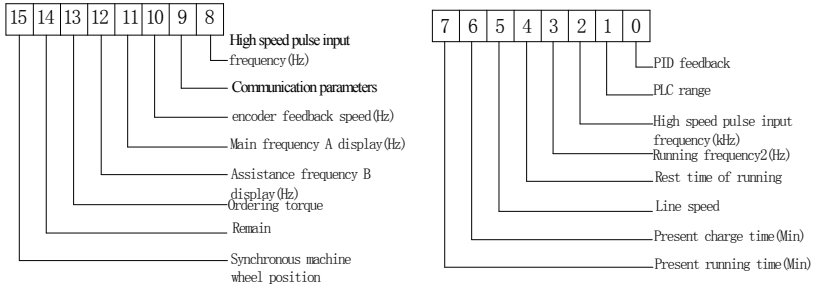

Figure5-12:Run display 2

If the above parameters need to be displayed in operation, firstly set its position to 1, and then set at F6.02 after converting the binary number to the hexadecimal number.

Running status display parameters, which is used to set the parameters that can be viewed when the inverter is in operation.

There are 32 parameters available for viewing, select desired status parameters according to F6.01, F6.02 binary parameter values, the display order starts from the lowest level of F6.01.

F6.03	Stop status display parameters	0x0001~0xFFFF	0033	☆

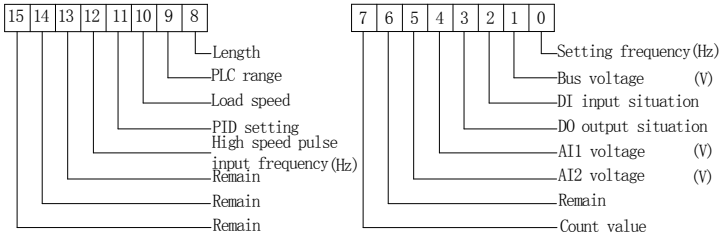

Figure5-13:Stop status

If the above parameters need to be displayed on operation, firstly set its position to 1, and then set at F6.03 after converting the binary number to the hexadecimal number.

F6.04	Load speed display coefficient	0.0001~6.5000	3.0000	☆

When load speed needs to be displayed, adjust the inverter's output frequency and load speed by using the parameter.

Pls refer to the F6.05 for the specific correspondence

F6.05	Decimal places for load speed display	0 decimal place	0	1	☆
		1 decimal place	1		
		2 decimal places	2		
		3 decimal places	3		

Decimal places for load speed display The below example illustrates the calculation of load speed:

If the load speed coefficient(F6.04) is 3.000, the number of decimal places of load speed(F6.05) is 2 (0 decimal places), when the inverter operating frequency reaches 40.00Hz, the load speed is : 40.00 * 3.000 = 1200 (0 decimal places display).If the inverter is shutdown, the load speed displays the speed relative to the set frequency, that is the "set load speed". If the set frequency is 50.00Hz, the load speed under the state of shutdown: 50.00 * 3.000 = 1500 (0 decimal places display)

F6.06	Inverter module radiator temperature	0.0℃~100.0℃	-	●

Display the inverter module IGBT temperature.The different models of the inverter module vary IGBT over-temperature protection values.

F6.07	Total run time	0h~65535h	-	●
Display the total run time of inverter When the run time reaches the set time(F7.21), the inverter's multi-function digital output function (12) outputs ON signal.				
F6.08	Total power-on time	0~65535h	-	●
Show the total time of inverter power-on, When the power-on time reaches the set time(F7.20), the inverter's multi-function digital output function(24) outputs ON signal.				
F6.09	Total power consumption	0~65535℃	-	●
Display the total power consumption of inverter to date until now				
F6.10	Part number	Inverter product number	-	●
F6.11	Software version number	Control panel software version number	-	●
F6.12~ F6.15	Reserve			
F6.16	Monitor selection 2	1Kbit/100bit: parameter number; 10bit/1bit: parameter series number	d0.04	●
The parameter of motor selection2 can be showed in the bottom of double LED or LCD.				
F6.17	Power correction coefficient	0.0~200.0	100.0	☆
Frequency converter with motor running, the display output power(d0.05)is different with the actual output power, through the parameters, adjust the converter display power and the actual output power corresponding relation.				

F6.18	Multi-function key definition 1	UP key is defined as add function key	0	0	☆
		UP key is defined free stop	1		
		UP key is defined Forward running	2		
		UP key is defined Reverse running	3		
		UP key is defined Forward Jog running	4		
		UP key is defined Reverse Jog running	5		
		UP key is defined UP function key	6		
		UP key is defined DOWN function key	7		
F6.19	Multi-function key definition 2	DOWN key is defined as subtract function key	0	0	☆
		Key is defined free stop	1		
		DOWN key is defined Forward running	2		
		DOWN key is defined Reverse running	3		
		DOWN key is defined Forward Jog running	4		
		DOWN key is defined Reverse Jog running	5		
		DOWN key is defined UP function key	6		
		DOWN key is defined DOWN function key	7		

Define the function keys of the user-defined keys

0: The multi-function key define 1 as the add function key.

Under the monitor menu, the add function key proceed the add modify of the keyboard setting frequency through F0.01 .

Under the parameter selection menu, The add function keys adjust the parameter selection

Under the parameter modify menu, the add function keys adjust the parameter value.

The multi-function key define 2 as the subtract function key.

Under the monitor menu , the subtract function keys proceed the subtract modify of the keyboard setting frequency through F0.01 .

Under the parameter selection menu, The subtract function keys adjust the parameter selection

Under the parameter modify menu, the subtract function keys adjust the parameter value.

1:Multi-function key is defined free stop key.

The key is effective under Parameter selection monitor menu, the inverter is free stop. After free stop , no startup command , after 1S, it is allowed restart .

2:Multi-function key is defined as FWD Forward running key.

Under monitor menu, the key is effective under Parameter selection menu, the inverter is forward running.

3:Multi-function key is defined as FEV reverse running function key.
The key is effective under Parameter selection monitor menu, the inverter is forward running.
4: Multi-function key is defined as Forward Jog running key.
The key is effective under Parameter selection monitor menu, the inverter is forward jog running.
5: Multi-function key is defined as Reverse Jog running key.
The key is effective under Parameter selection monitor menu, the inverter is reverse jog running.
6: Multi-function key is defined as UP function key.
The key is effective at any time, the control way is same as terminal control UP.
7: Multi-function key is defined as DOWN function key.
The key is effective at any time , the control way is same as terminal control UP.

F6.20	Keyboard lock selection	RUN/STOP key is enabled	0	0	☆
		STOP/RESET/ key and encoder is enabled	1		
		RUN/STOP/UP/DOWN key is enabled	2		
		STOP key is enabled	3		

Pressing the PRG+ Encoder keys to achieve lock and unlock.
When the keyboard belongs to the lock state, when the keyboard is locked, the digital display tube will show "A." in front, such as the keyboard on display 50, when the lock, press the keyboard "PGR" key, digital display "A.50.00.

F6.21	QUICK Function Selection	No function	0	0	☆
		jog running	1		
		shift key	2		
		forward/Reverse running switching	3		
		UP/DOWN setting remove	4		
		Free stop	5		
		commands switch orderly	6		

1:Jog running: press QUICK key , the inverter will make jog running in the default direction.
2:Shift key : Choose displayed parameter circularly under running or stop interface
3:Forward/Reverse running switching: it can complete the request of forward/Reverse running, it is effective under the keyboard command.
4:UP/DOWN setting remove: To remove the settings of the UP/DOWM.
5:Free stop; operate the quick key to stop the inveter.
6:Switch and display the commands orderly by pressing QUICK key ,Keyboard setting--terminal setting-communications setting will switch orderly.

5-2-8.Auxiliary function: F7.00-F7.54

Code	Parameter name	Setting range		Factory setting	Change
F7.00	Jog running frequency	0.00Hz~F0.19(Maximum frequency)		6.00Hz	☆
F7.01	Jog acceleration time	0.0s~6500.0s		5.0s	☆
F7.02	Jog deceleration time	0.0s~6500.0s		5.0s	☆

Defined the inverter's reference frequency and ac/deceleration time when jogging.In operation of Jog, the start-up mode is fixed as direct start-up mode (F3.00 = 0), the shutdown mode is fixed as deceleration parking mode (F3.07 = 0).

F7.03	Jog priority	Invalid	0	0	☆
		Valid	1		

This parameter is used to set whether the priority of jog function is active or not.When it is set to active, if the jog command is received by inverter in operation, the inverter will change to jog running status.

F7.04	Jump frequency 1	0.00Hz~F0.19(Maximum frequency)	0.00Hz	☆
F7.05	Jump frequency 2	0.00Hz~F0.19(Maximum frequency)	0.00Hz	☆
F7.06	Jump frequency range	0.00Hz~F0.19(Maximum frequency)	0.00Hz	☆

When the set frequency is in the jump frequency range, the Actual operating frequency will run at the jump frequency close from the set frequency . The inverter can avoid mechanical resonance point of load by setting jump frequency.

PI550-E can set two jump frequency points, if the two jump frequencies are set to 0, the jump frequency function will be canceled. For the principle schematic of jump frequency and its range, please refer to the following figure.

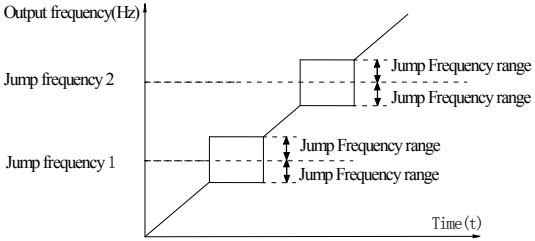

Figure5-14:Schematic diagram of jump frequency

F7.07	Jump frequency availability during ac/deceleration process	Invalid	0	0	☆
		Valid	1		

The function code is used to set whether the jump frequency is active or not in the process of acceleration and deceleration.

If it is set to active, when the operating frequency is in the jump frequency range, the Actual operating frequency will skip the set jump frequency boundary. The below figure below shows the jump frequency status in the process of acceleration and deceleration.

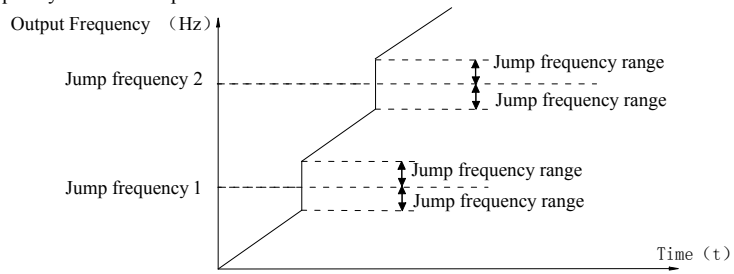

Figure5-15:Schematic diagram of jump frequency availability in the process of acceleration and deceleration.

F7.08	Acceleration time 2	0.0s to 6500.0s	-	☆
F7.09	Deceleration time 2	0.0s to 6500.0s	-	☆
F7.10	Acceleration time 3	0.0s to 6500.0s	-	☆
F7.11	Deceleration time 3	0.0s to 6500.0s	-	☆
F7.12	Acceleration time 4	0.0s to 6500.0s	-	☆
F7.13	Deceleration time 4	0.0s to 6500.0s	-	☆

PI550-E provides 4 groups of deceleration time, respectively F0.13\F0.14 and the above 3 groups of deceleration time.

The 4 groups of deceleration time are defined exactly the same, please refer to the instructions of F0.13 and F0.14. The 4 groups of deceleration time can be switched through different combinations of the multi-function digital input terminal DI, please refer to the instructions of function code F1.00 to F1.07 in the attachment 2 for the detailed application methods .

F7.14	Switching frequency point between	0.00Hz~F0.19(Maximu	0.00Hz	☆

	acceleration time 1 and acceleration time 2	m frequency)		
F7.15	Switching frequency point between deceleration time 1 and deceleration time 2	0.00Hz~F0.19(Maximum frequency)	0.00Hz	☆

The function is active when motor 1 is selected and DI terminal is not selected to switch between ac/deceleration. It is used to automatically select ac/deceleration time by not DI terminal but the operating frequency range when the inverter is running.

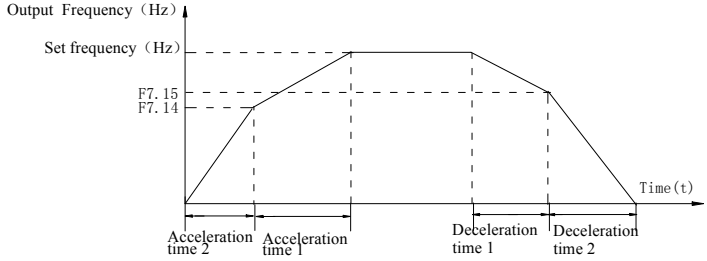

Figure5-16:Schematic diagram of switching between acceleration and deceleration

If the operating frequency is less than F7.14, select acceleration time 2; otherwise select acceleration time 1.

For the above figure in the process of deceleration, if the operating frequency is more than F7.15, select deceleration time 1; otherwise select deceleration time 2.

F7.16	Forward/reverse rotation dead-band	0.00s~3600.0s	0.0s	☆

It is the waiting time that the inverter reaches zero speed when the parameter is used to switch between forward and reverse rotation.

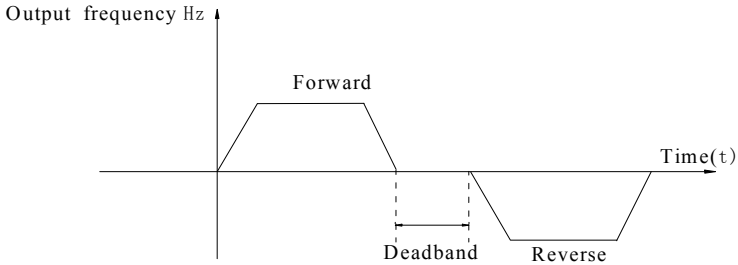

Figure5-17:Schematic diagram of the dead-band of forward and reverse

F7.17	Reverse rotation control	Allow	0	0	☆
		Prohibit	1		

For certain production equipment, the reverse rotation may result in damage to the equipment, the function can disable the reverse rotation. The factory default allows reverse rotation.

F7.18	Set frequency lower than lower limit frequency mode	Running at lower limit frequency	0	0	☆
		Stop	1		
		Zero speed running	2		

When the set frequency is lower than the lower limit frequency, the inverter operating status can be selected through the parameter. PI550-E provides three modes of operation to meet the needs of a variety of applications.

F7.19	Droop control	0.00Hz~10.00Hz	0.00Hz	☆

This function is generally used for the load distribution that multiple motors drag the same one load.

The droop control means that the inverter output frequency is decreased as the load is

increased, so that when multiple motors drag(work for)the same one load, each motor's output frequency much drops, which can reduce the load of the motor to balance evenly multiple motors' load .

This parameter means the decreased value of output frequency when the inverter outputs the rated load.

F7.20	Setting cumulative power-on arrival time	0h~36000h	0h	☆

When the total power-on time(F6.08) reaches the time set by F7.20, the inverter multifunction digital DO outputs ON signal.

F7.21	Setting cumulative running arrival time	0h~36000h	0h	☆

Used to set the running time of inverter.

When the total power-on time(F6.07) reaches the set timeF7.21, the inverter multi-function digital DO outputs ON signal.

F7.22	Start protection	OFF	0	0	☆
		ON	1		

This parameter relates to the security features of the inverter

If this parameter is set to 1 , and if the running command is active (e.g. the terminal running command is closed before power-on) when the inverter is in power-on, the inverter will not respond to the running command, you must firstly cancel the running command, when the running command is active again, the inverter will respond.

In addition, if the parameter is set to 1, and if the running command is active when the inverter resets fault, the inverter will not respond to the running command, you must firstly cancel the running command in order to eliminate running protection status.

The parameter is set 1, you can prevent the danger caused by that the inverter unknowingly responds to the running command in the event of power-on and fault reset.

F7.23	Frequency detection value (FDT1)	0.00Hz~F0.19(Maximum frequency)	50.00Hz	☆
F7.24	Frequency detection hysteresis value (FDT1)	0.0%~100.0%(FDT1 level)	5.0%	☆

The inverter's multi-function output DO will output ON signal when the operating frequency is higher than the detected value, conversely DO output ON signal is canceled.

The above parameters is used to set the detected value of output frequency, and the hysteresis value after the output is canceled. Of which, F7.24 is the percentage of the hysteresis frequency in the detected value(F7.23). The below figure is the schematic diagram of FDT.

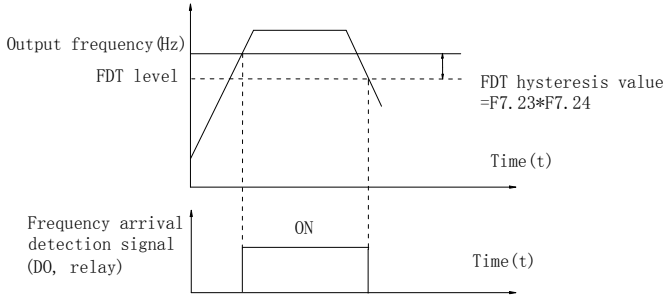

Figure5-18:Schematic diagram of FDT level

F7.25	Frequency reaches detection width	0.00~100%(maximum frequency)	0.0%	☆

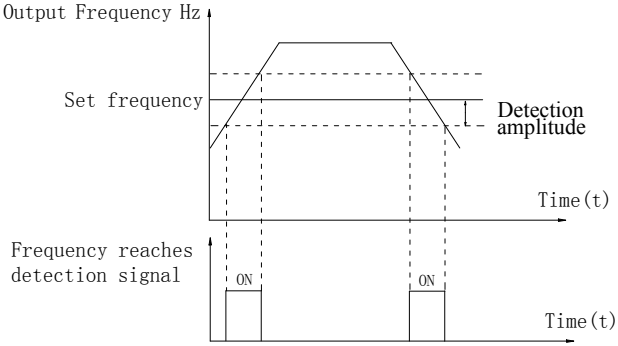

Figure5-19:Schematic diagram of frequency arrival detection amplitude

The inverter's multi-function output DO will output ON signal when the inverter's operating frequency is in a certain range of target frequency.

This parameter is used to set the frequency arrival detection range, the parameter is the percentage of maximum frequency. The above figure is the schematic diagram of frequency arrival.

F7.26	Frequency detection value (FDT2)	0.00Hz~F0.19(Maximum frequency)	50.00Hz	☆
F7.27	Frequency detection hysteresis value (FDT2)	0.0%~100.0%(FDT2 level)	5.0%	☆

The frequency detection function is same as FDT1 exactly, please refer to the instructions of FDT1 or function codes F7.23, F7.24.

F7.28	Random arrivals frequency detection value 1	0.00Hz to F0.19 (Maximum frequency)	50.00Hz	☆
F7.29	Random arrivals frequency detection width 1	0.00% to 100.0% (Maximum frequency)	0.0%	☆
F7.30	Random arrivals frequency detection value 2	0.00Hz to F0.19 (Maximum frequency)	50.00Hz	☆
F7.31	Random arrivals frequency detection width 2	0.00% to 100.0% (Maximum frequency)	0.0%	☆

When the inverter's output frequency randomly reaches the range of the detected value(positive or negative), the multi-function DO will output ON signal.

PI550-E provides two groups of parameter to set frequency value and frequency detection range. The above figure is the schematic diagram of the function.

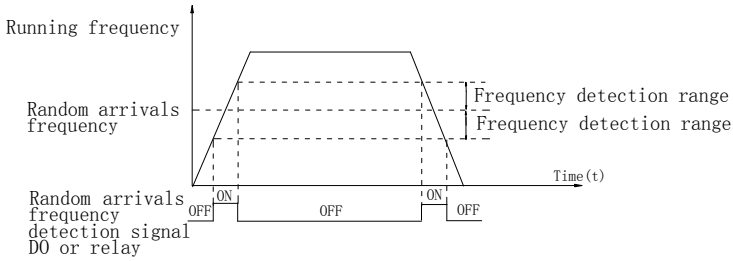

Figure5-20:Schematic diagram of random arrivals frequency detection

F7.32	Zero current detection level	0.0%~300.0%(Rated motor current)	5.0%	☆
F7.33	Zero current detection delay time	0.01s~360.00s	0.10s	☆

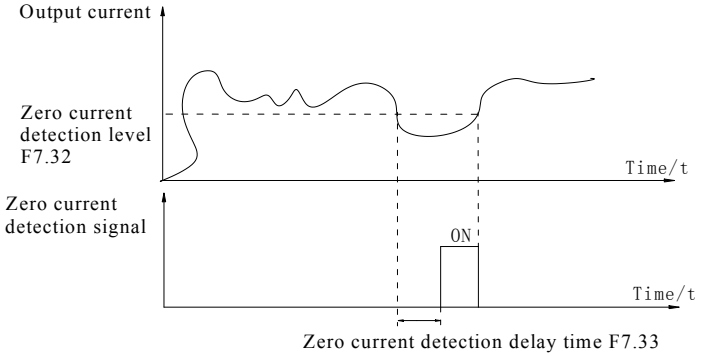

Figure5-21:Schematic diagram of zero current detection

When the inverter's output current is less than or equal to zero current detection level and lasts for longer than the delay time of zero-current detection, the inverter's multi-function DO will output ON signal. The figure is the schematic diagram of zero current detection.

F7.34	Overrun value of output current	0.0% (Not detected) 0.1%~300.0%(Rated motor current)	200.0%	☆
F7.35	Output Current overrun detection delay time	0.01s~360.00s	0.00s	☆

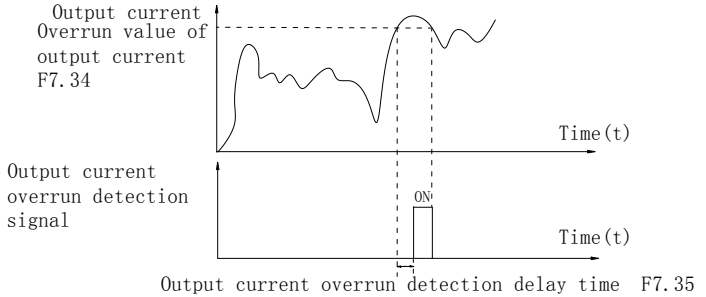

Figure5-22:Schematic diagram of output current overrun detection signal

When the inverter's output current is more than or overrun the detection point and lasts for longer than the delay time of software over-current point detection, the inverter's multi-function DO will output ON signal.

F7.36	Random arrivals current 1	0.0%~300.0%(Rated motor current)	100%	☆
F7.37	Random arrivals current 1 width	0.0%~300.0%(Rated motor current)	0.0%	☆
F7.38	Random arrivals current 2	0.0%~300.0%(Rated motor current)	100%	☆
F7.39	Random arrivals current 2 width	0.0%~300.0%(Rated motor current)	0.0%	☆

When the inverter's output current randomly reaches the range of the current detection width(positive or negative), the inverter multi-function DO will output ON signal.

PI550-E provides two group of sets of parameter for Randomly Reaches Current and Detection Width, the figure is the functional diagram.

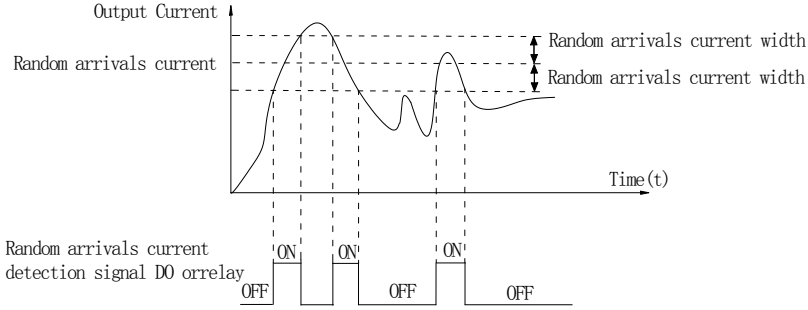

Figure5-23:Schematic diagram of random arrivals current detection

F7.40	Module temperature arrival	0℃~100℃		75℃	☆
When the inverter radiator temperature reaches the temperature, the inverter multi-function DO will output "Module Temperature Arrival" ON signal.					
F7.41	Cooling fan control	Fan running only when running	0	0	☆
		Fan always running	1		
Used to select the cooling fan mode, if you select 0, the fan will run when the inverter is running, but in the stop state of inverter, if the radiator temperature is above 40 degrees, the fan will run, otherwise the fan will not run. When select 1, when the fan will always running after power-on.					
F7.42	Timing function selection	Invalid	0	0	★
		Valid	1		
F7.43	Timing run time selection	F7.44 setting	0	0	★
		AI1	1		
		AI2	2		
		Panel potentiometer	3		
		Analog input range 100% corresponds to F7.44			
F7.44	Timing run time	0.0Min~6500.0Min		0.0Min	★
The group of parameters are used to complete the inverter timing run function. If F7.42 timing function is active, the inverter starts as the timer starts, when the set timing run time is reached, the inverter automatically shut down, at the same time the multi-function DO will output ON signal. Every time the inverter starts, the timer will time from 0, the remaining time can be viewed by d0.20. The timing run time is set by F7.43, F7.44 in minute.					
F7.45	Current running arrival time.	0.0Min~6500.0Min		0.0Min	★
When current running time reaches this time, the inverter multi-function digital DO will output"Current Running Time Arrival "ON signal.					
F7.46	Awakens frequency	Dormancy frequency (F7.48)~ to maximum frequency (F0.19)		0.00Hz	☆
F7.47	Awakens delay time	0.0s~6500.0s		0.0s	☆
F7.48	Dormancy frequency	0.00Hz~ awakens frequency (F7.46)		0.00Hz	☆
F7.49	Dormancy delay time	0.0s~6500.0s		0.0s	☆
F7.50	AI1 input voltage protection lower limit	0.00V~F7.51		3.10V	☆
F7.51	AI1 input voltage protection upper limit	F7.50~10.00V		6.80V	☆
When analog AI1 input is greater than F7.51, or when AI1 input is less than F7.50, the inverter multi-functional DO will output "AI1 input overrun"signal, so as to indicate whether the AI1 input voltage is within the set range or not.					

F7.52~F7.53	Reserve				
F7.54	Jog mode setting	Bits	Jog direction	002	☆
		Forward	0		
		reverse	1		
		Determine the direction from the main terminal	2		
		Ten bits	End running state by Jogging		
		Restore to the state before jogging	0		
		stop running	1		
		Hundred bits	Acceleration/deceleration time after stop jogging		
		Recover to the acceleration/deceleration time before jogging	0		
		Keep the acceleration/deceleration time when jogging	1		

5-2-9.Fault and protection:F8.00-F8.35

Code	Parameter name	Setting range	Factory setting	Change
F8.00	Over-current stall gain	0~100	20	☆
F8.01	Over-current stall protection current	100%~200%	-	☆

When the inverter output current reaches the set current stall protection current (F8.01), the inverter reduces the output frequency in the acceleration or constant speed operation, while the slow down speed, until the current is less than the current (F8.01).

Over-current stall gain is used for adjusting inhibition over-current capability during ac/deceleration. The greater this value, the stronger inhibition over-current capability Under the premise that the over-current does not occur, the best is the smaller gain setting.

For the small inertia load, the over-current stall gain should be small, otherwise which cause the slower system dynamic response. For the big inertia load, the over-current stall gain should be large, otherwise the poor inhibitory effect may cause over-current fault.

When the over-current stall gain is set to 0, the over-current stall function will be canceled.

F8.02	Motor over-load protection	Prohibit	0	1	☆
		Allow	1		
F8.03	Motor over-load protection gain	0.20~10.00		1.00	☆

F8.02 = 0: No motor overload protection function, there may be the risk of damage to the motor due to overheating, it is recommended that the thermal relay is installed between the inverter and the motor;

F8.02 = 1: The inverter will determine whether the motor is overloaded or not according to the inverse time curve of motor overload protection. Inverse time curve of motor overload protection: 220% x (F8.03) x rated motor current, if this lasts for 1 second, the alarm of motor will be prompted overload fault; 150% x (F8.03) × rated motor current, if this lasts for 60 seconds, the alarm of motor overload will be prompted.

User shall correctly set the value of F8.03 according to the Actual motor overload capacity, if the value is set to too large , which may easily lead to motor overheating and damage while the inverter will not alarm!

F8.04	Motor overload pre-alarm coefficient	50%~100%	80%	☆

This function is used in the front of motor overload fault protection, and sends a pre-alarm signal to the control system by DO. The warning coefficient is used to determine the extent of pre-alarm prior to motor overload protection. The higher the value, the smaller the extent of pre-alarm in advance.

When the cumulative amount of inverter output current is greater than the product of the inverse time curve of overload and F8.04, the inverter multi-function digital DO will output

"Motor Overload Pre-Alarm" ON signal.				
F8.05	Over-voltage stall gain	0(No over-voltage stall) ~100	0	☆
F8.06	Over-voltage stall protection voltage	200.0V~2500.0V	-	☆

In the process of the inverter deceleration, when the DC bus voltage exceeds the over-voltage stall protection voltage/the energy consumption brake voltage, the inverter stops deceleration and maintains at the current operating frequency(if F3.12 is not set to 0, the braking signal is outputted the energy consumption brake can be implemented by an external braking resistor.) and then continues to decelerate upon decline of the bus voltage

Over-voltage stall gain is used for adjusting inhibition over-voltage capability during deceleration. The greater this value, the stronger inhibition over-voltage capability under the premise that the over-voltage does not occur, the best is the smaller gain setting.

For the small inertia load, the over-voltage stall gain should be small, otherwise which cause the slower system dynamic response. For the big inertia load, the over-voltage stall gain should be large, otherwise the poor inhibitory effect may cause over-voltage fault.

When the overvoltage stall gain is set to 0, the over-voltage stall function will be canceled.

F8.07	Input phase loss protection	Units digit	Input phase loss protection selection	11	☆
		Prohibit	0		
		Allow	1		
		Tens digit	Contactor actuation protection		
		Prohibit	0		
		Allow	1		

The input phase loss protection function is only for PI550-E G type inverter with 18.5kW or above, not for the F type inverter with 18.5kW or below and however F8.07 is set to 0 or 1.

F8.08	Output phase loss protection selection	Prohibit	0	1	☆
		Allow	1		

Select whether the output phase loss protection is done or not.

F8.09	Power-on short circuit to ground	Invalid	0	1	☆
		Valid	1		

You can detect whether the motor is shorted to ground when the inverter is powered on.

If this function is active, the inverter's UVW terminal will output voltage after power-on for a while.

F8.10	Number of automatic fault reset	0~32767	0	☆

When the inverter selects automatic fault reset, it is used to set the number of times of automatic fault reset. If the set number of times is exceeded, the inverter remains a failed state.

When set F8.10 (Number of automatic fault reset) ≥ 1, inverter will run automatically when re-power after instantaneous power-off.

When fault self-recovery restart uptime over an hour later, it will restore the original setting of automatic fault reset.

F8.11	Fault DO action selection during automatic fault reset	OFF	0	0	☆
		ON	1		

If the inverter automatic fault reset function is set, F8.10 can be used to set whether DO action is active or not during the automatic fault reset

F8.12	Automatic fault reset interval	0.1s~100.0s	1.0s	☆

It is the waiting time from the inverter fault alarm to automatic fault reset.

F8.13	Overspeed detection value	0.0%~50.0%(Maximum frequency)	20.0%	☆
F8.14	Overspeed detection time	0.0s~60.0s	1.0s	☆

This feature is only available when the inverter runs with speed sensor vector control.
When the inverter detects that the actual motor speed exceeds the set frequency, and the excess is greater than the overspeed detection value(F8.13), and the duration is greater than the overspeed detection time(F8.14) the inverter will alarm fault ID Err.43, and troubleshoots according to the protection action.

F8.15	Detection value for too large speed deviation	0.0%~50.0%(Maximum frequency)	20.0%	☆

F8.16	Detection time for too large speed deviation	0.0s~60.0s	5.0s	☆

This feature is only available when the inverter runs with speed sensor vector control.

When the inverter detects that the actual motor speed is different from the set frequency, and the deviation is greater than the detection value for too large speed deviation(F8.15), and the duration is greater than the detection time for too large speed deviation(F8.16), the inverter will alarm fault ID Err.42, and troubleshoots according to the protection action.

If the detection time for too large speed deviation is 0.0s, the detection for too large speed deviation is canceled.

F8.17	Fault protection action selection 1	Units digit	Motor overload (Fault ID Err.11)	00000	☆
			Free stop: 0		
			Stop at the selected mode: 1		
			Continue to run: 2		
		Tens digit	input phase loss (Err.12) (Same as units digit)		
		Hundred digit	output phase loss (Err.13) (Same as units digit)		
		Thousand digit	external fault (Err.15) (Same as units digit)		
		Ten thousands digit	Communication abnormal(Err.16)(Same as units digit)		
F8.18	Fault protection action selection 2	Units digit	Encoder fault(Err.20)	00000	☆
			Free stop: 0		
			Switch to V/F and then stop at the selected mode: 1		
			Switch to V/F and continue to run: 2		
		Tens digit	function code read and write abnormal (Err.21)		
			Free stop: 0		
			Stop at the selected mode: 1		
		Hundreds digit	Reserved		
		Thousands digit	Motor overheating (Err.45) (Same as F8.17 units digit)		
		Ten thousands digit	Running time arrival(Err.26)(Same as F8.17 units digit)		
F8.19	Fault protection action selection 3	Units digit	User-defined fault 1(Err.27) (Same as F8.17 units digit)	00000	☆
		Tens digit	User-defined fault 2(Err.28) (Same as F8.17 units digit)		
		Hundreds digit	Power-on time arrival (Err.29) (Same as F8.17 units digit)		
		Thousands digit	Load drop (Err.30)		
			Free stop: 0		
			stop at select mode: 1		
			Deceleration up to 7% of the rated motor frequency, and then continue running, automatically return to the set frequency to run if the load drop does not happen.: 2		
		Ten thousands digit	PID feedback loss when running (Err.31) (Same as F8.17 units digit)		
F8.20	Fault protection action selection 4	Units digit	Too large speed deviation (Err.42) (Same as F8.17 units digit)	00000	☆
		Tens digit	Motor over-speed (Err.43) (Same as F8.17 units digit)		
		Hundreds digit	Initial position error (Err.51) (Same as F8.17 units digit)		

		Thousands digit	Reserved		
		Ten thousands digit	Reserved		

When "free stop" is selected, the inverter displays Err. *, and directly stops.When "Stop at the selected mode" is selected, the inverter displays Arr. *, firstly stops at the selected mode and then displays Err. * When "continue to run" is selected, the inverter continues to run and displays Arr. *, the operating frequency is set by F8.24.

F8.21~ F8.23	Reserved				
F8.24	Fault running frequency	current frequency running	0	0	☆
		setting frequency running	1		
		upper frequency running	2		
		down frequency running	3		
		Abnormal reserve frequency running	4		
F8.25	Abnormal reserve frequency	60.0%~100.0%		100%	☆

When the inverter occurs faults during operation, and the troubleshooting mode for the fault is set to "continue to run", the inverter displays Arr. *, and runs at the operating frequency set by F8.24.

When "abnormal spare frequency" is selected, the value set by F8.25 is the percentage of the maximum frequency.

F8.26	Momentary power cut action selection	Invalid	0	0	☆
		Deceleration	1		
		Deceleration and stop	2		
F8.27	Frequency switching points for momentary power cut deceleration	50.0%~100.0%		90%	☆
F8.28	Recovery voltage judgment time of momentary power cut	0.00s~100.00s		0.50s	☆
F8.29	Judgment voltage of momentary power cut	50.0%~100.0%(Standard bus voltage)		80.0%	☆

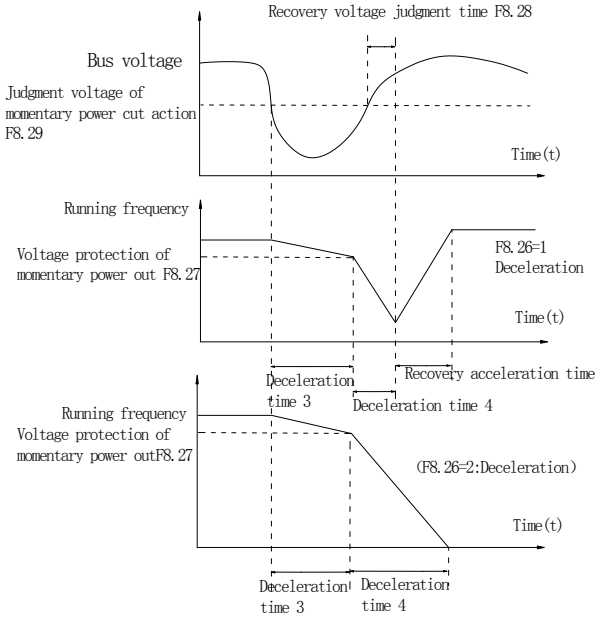

Figure5-24:Schematic diagram of momentary power cut action

This feature means that when the momentary power cut happens or the voltage suddenly reduces, the drive will reduce the output speed to compensate the reduced value of the inverter DC bus voltage by using load feedback energy, in order to maintain the inverter to continue running.

If F8.26 = 1, when the momentary power cut happens or the voltage suddenly reduces, the inverter will decelerate, when the bus voltage is back to normal, the inverter will normally accelerate to the set frequency to run. To determine whether the bus voltage returns to normal or not, check whether the bus voltage is normal and lasts for longer than the set time by F8.28.

If F8.26 = 2, when the momentary power cut happens or the voltage suddenly reduces, the inverter will decelerate till to stop.

F8.30	Load drop protection selection	Invalid	0	0	☆
		Valid	1		
F8.31	Load drop detection level	0.0%~100.0% (Rated current)		10.0%	☆
F8.32	Load drop detection time	0.0s~60.0s		1.0s	☆

If the load drop protection function is active, when the inverter output current is less than the load drop detection level (F8.31)and the duration is longer than the load drop detection time(F8.32), the inverter output frequency is automatically reduced to 7% of the rated frequency. During the load drop protection, if the load recovers, the inverter automatically resumes to the set frequency to run.

F8.33	motor temperature sensor type	0: Invalid;1: PT100 detect	0	☆

Motor temperature sensor signal, need to connect to the panel S1, S2, GND terminal.

F8.34	motor over heat protection value	0~200	110	☆
F8.35	Motor overheating forecasting warning threshold	0~200	90	☆

When the motor temperature more than motor overheating protection valve value F8.34, frequency converter fault alarm, and according to the selected fault protection action way.
When the motor temperature exceeds motor overheating if forecasting warning threshold F8.35 , inverter multi-function DO early warning ON signal output motor overheating. The motor

temperature in d0.41 display.

5-2-10.Communication parameter: F9.00-F9.07

Code	Parameter name	Setting range		Factory setting	Change
F9.00	Baud rate	Units digit	MODBUS	6005	☆
		300bps	Reserved		
		600bps	Reserved		
		1200bps	2		
		2400bps	3		
		4800bps	4		
		9600bps	5		
		19200bps	6		
		38400bps	7		
		57600bps	8		
		115200bps	9		
		Tens digit	Profibus-DP		
		115200bps	0		
		208300bps	1		
		256000bps	2		
		512000bps	3		
		Hundreds digit	Reserved		
		Thousands digit	CAN bus baudrate		
		20	0		
		50	1		
		100	2		
		125	3		
		250	4		
		500	5		
		1M	6		
F9.01	Data format	No parity (8-N-2)	0	0	☆
		Even parity (8-E-1)	1		
		Odd parity (8-O-1)	2		
		No parity (8-N-1)	3		
F9.02	This unit address	1~250,0 for broadcast address		1	☆
F9.03	Response delay	0ms-20ms		2ms	☆
F9.04	Communication timeout time	0.0 (invalid), 0.1s-60.0s		0.0	☆
F9.05	Data transfer format selection	Units igit	MODBUS	30	☆
		Non-standard MODBUS protocol	0		
		Standard MODBUS protocol	1		
		Tens digit	Profibus		
		PPO1 format	0		
		PPO2 format	1		
		PPO3 format	2		
		PPO5 format	3		
F9.06	Communication read current resolution	0.01A	0	0	☆
		0.1A	1		
F9.07	Communication card type	Modbus communication card	0	0	☆
		Profibus communication card	1		

		Reserved	2		
		CAN bus communication card	3		

5-2-11.Torque control parameters FA.00-FA.07

Code	Parameter name	Setting range		Factory setting	Change
FA.00	S/T control mode selection	Speed control(S)	0	0	★
		Torque control (T)	1		

Used to select the inverter control mode: Speed control or torque control.

PI550-E multifunction digital terminal has two related functions on torque control: Torque control banned (function 29), and speed control / torque control switching (function 46). The two terminals must use in conjunction with FA.00 so as to switch between speed control and torque control.

When the speed control / torque control switching terminal is invalid, the control mode is determined by FA.00, if the terminal is valid, the control manner is equivalent to the FA.00's value negated.

In any case, when the torque control ban terminal is valid, the inverter is fixed at speed control mode.

FA.01	Torque setting source	keyboard setting (FA.02)	0	0	★
		Analog AI1 setting	1		
		Analog AI2 setting	2		
		Panel potentiometer setting	3		
		High-speed pulse setting	4		
		Communications reference	5		
		MIN(AI1,AI2)	6		
		MAX(AI1,AI2)	7		
		High-speed pulse setting	8		
FA.02	Torque figures set	-200.0%~200.0%		150%	☆

FA.01 is used to select the torque setting source, there are 9torque setting modes in all.

The torque setting adopts the relative value, the 100.0% corresponds to the rated torque of inverter. Setting range is from -200.0% to 200.0%, indicating that the maximum torque of inverter is 2 times of the rated torque of inverter.

When the torque setting to a positive, frequency converter operate forwardly, When the torque setting to a negative, inverter operate inversely.

When the torque setting adopts mode 1 to 8, the 100% of communications, analog input and pulse input corresponds to FA.02.

FA.03	Torque control acceleration time	0.00s~650.00s	0.00s	☆
FA.04	Torque control deceleration time	0.00s~650.00s	0.00s	☆

Under the torque control mode, the difference between the motor output torque and load torque determines the change rate in speed of the motor and load, therefore, the motor speed may rapidly change, resulting in the problems such as noise or excessive mechanical stress. By setting the torque control ac/deceleration time, you can make a smooth change of motor speed.

But the occasions that needs the rapid response of torque, the torque control ac/deceleration time must be set to 0.00s. For example: when two hardwired motors drag the same one load, in order to ensure that the load is evenly distributed, you must set one inverter as the master unit that works under the speed control mode, the other inverter as the auxiliary unit that works under the torque control mode, the Actual output torque of the master unit is used as the torque command of the auxiliary, the torque of the auxiliary needs quickly follow the master unit, so the torque control ac/deceleration time of the auxiliary unit shall be set to 0.00s.

FA.05	Torque control forward maximum frequency	0.00Hz~maximum frequency (F0.19)	50.00Hz	☆
FA.06	Torque control backward maximum frequency	0.00Hz~ maximum frequency (F0.19)	50.00Hz	☆

Used to set the maximum operating frequency of inverter forward or reverse running under the torque control mode

Under the torque control mode, if the load torque is less than the motor output torque, the motor speed will continue to rise, in order to prevent "Runaway" and other accidents of mechanical systems, it is necessary to limit the maximum speed of motor under the torque control mode.

FA.07	Torque filter time	0.00s~10.00s	0	☆

5-2-12.Control optimization parameters: Fb.00-Fb.09

Code	Parameter name	Setting range		Factory setting	Change
Fb.00	Fast current limiting manner	Disable	0	1	☆
		enable	1		

Enable Quick Current Limiting function, which can minimize the overcurrent fault of inverter , and ensure the uninterrupted operation of inverter. If the drive is in the state of fast current limiting for a long period of time , the inverter may be damaged by overheating and others, this case is not allowed, so the inverter will alarm fault with fault ID Err.40, it indicates that the inverter exists overload and needs to be shut down.

Fb.01	Undervoltage point setting	-	Depends on model	☆

the different voltage points are as follows:
Single-phase 220V or three-phase 220V: 200V
Three-phase 380Vor three-phase 480V: 350V
Three-phase 690V: 650V

Fb.02	Overvoltage point setting	200.0V~2500.0V	-	★

The setting over voltage point of the software has no influence on the setting over voltage point of the hardware. The value of the voltage set to the frequency inverter, different voltage level ‘s factory defaults are as following:

Voltage level	Over voltage point factory defaults
Single phase 220V	400.0V
Three phase 220V	400.0V
Three phase 380V	810.0V
Three phase 480V	890.0V
Three phase 690V	1300.0V

Remark: Meanwhile, the factory defaults are the upper limit value of over voltage protection in frequency inverter. Only when Fb.02 setting value is smaller than all voltage factory defaults, the new parameter setting takes effect. If it is higher than factory defaults, factory defaults will be the standard value.

Fb.03	Deadband compensation mode selection	No compensation	0	1	☆
		Compensation mode 1	1		
		Compensation mode 2	2		

Generally do not need to modify this parameter, only when the special requirements to the output voltage waveform quality is required or when the motor oscillation and other abnormal happen, you need to try to switch to select a different mode of compensation.The compensation mode 2 for high-power is recommended.

Fb.04	Current detection compensation	100~120	110	☆

Used to set the inverter's current sensing compensation, if the set value is too large, which may reduce the control performance. Generally do not need to be modified.

Fb.05	Vector optimization without PG mode selection	No optimization	0	1	★
		Optimization mode 1	1		
		Optimization mode 2	2		
Fb.06	Upper limiting frequency for DPWM switching	0.00Hz~150Hz		12.00Hz	☆

Fb.07	PWM modulation manner	Asynchronous	0	0	☆
		Synchronous	1		

Only valid for V/F control. Synchronous modulation refers to that the carrier frequency linearly change with the change of output frequency, in order to ensure the unchanged of their ratio(Carrier to noise ratio), generally it is used when the output frequency is higher, is conducive to ensure the output voltage quality.

Under the lower output frequency (100Hz) mode, generally the synchronize modulation is not required, because at the time the ratio of the carrier frequency to the output frequency is relatively high, the asynchronous modulation has more obvious advantages.

When the operating frequency is higher than 85Hz, the synchronous modulation takes effect, the fixed mode is the asynchronous modulation below the frequency.

Fb.08	Random PWM depth	PWM Invalid	0	0	☆
		PWM carrier frequency random depth	1~10		

By setting Random PWM, the monotonous and shrill motor sound can become softer and which helps reduce external electromagnetic interference. When Random PWM Depth is set to 0, Random PWM will be invalid.

It will get different results by adjusting different Random PWM Depths,

Fb.09	Deadband time adjustment	100%~200%	150%	☆

About 1140V voltage setting, the voltage availability will be improved by adjust voltage setting. Too lower value setting can lead to system instability. So it is not recommended to revise it for users.

5-2-13.Extended parameter: FC.00-FC.02

Code	Parameter name	Setting range	Factory setting	Change
FC.00	Undefined			
FC.01	Proportional linkage coefficient	0.00~10.00	0	☆

When proportional linkage coefficient is 0, proportional linkage function can not work.According to the setting by proportional linkage, communication address of master (F9.02) is set to 248, and communication address of slave is set to 1 to 247.Slave output frequency = Master setting frequency * Proportional linkage coefficient + UP/DOWN Changes.

FC.02	PID start deviation	0.0~100.0	0	☆

If the absolute value of deviation between PID setting source and feedback source is greater than of the parameter, the inverter starts only when PID output frequency is greater than the wake-up frequency to prevent the repetition of the inverter starts.If the inverter is operating, when PID feedback source is greater than setting source and the output frequency is less than or equal to (F7.48) sleep frequency, the inverter goes to sleep after (F7.49) delay time and performs free stop.

If the inverter is in the state of sleep and the current run command is valid, the absolute value of deviation between PID setting source and feedback source is greater than of PID start deviation (FC.02), when PID setting frequency is greater than or equal to F7.46 wake-up frequency, the inverter will start after (F7.47) delay time.

If you want to use the function of PID start deviation, PID stop computing status must be set to active (E2.27 = 1).

5-2-14.Wobbulate, fixed-length and counting:E0.00-E0.09

Wobbulate function is suitable for the textile, chemical, and other industries, as well as occasions that needs traverse and winding function. Wobbulate function means that the inverter output frequency swings up and down to set the frequency centering around the set frequency, the locus the operating frequency on the timeline is as shown in figure, which the swing amplitude is set by E0.00 and E0.01, when E0.01 is set to 0, the wobbulate will not work.

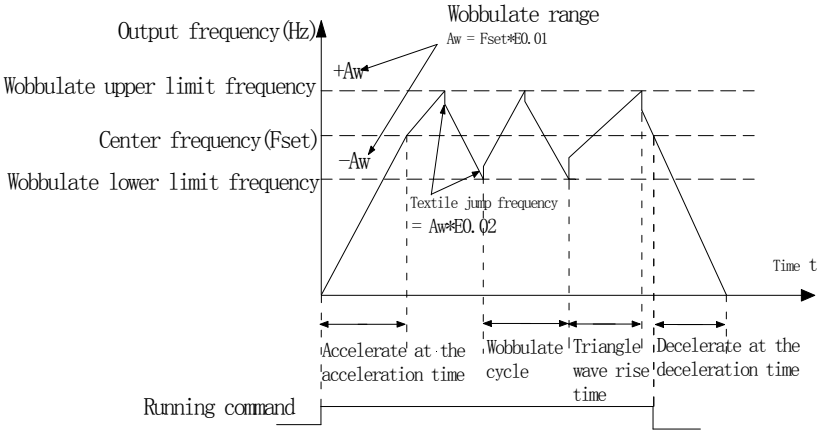

Figure5-25:Schematic diagram of wobbulate operating

Code	Parameter name	Setting range		Factory setting	Change
E0.00	Swing setting manner	relative to center frequency	0	0	☆
		relative to maximum requency	1		
This parameter is used to determine the baseline of the swing 0: Relative to center frequency(F0.07 frequency source).For the variable swing system. The swing varies with the change of center frequency (the set frequency) 1: Relative to maximum frequency(F0.19)For the fixed swing system, the swing is fixed.					
E0.01	Wobbulate range	0.0%~100.0%		0.0%	☆
E0.02	Sudden jump frequency range	0.0%~50.0%		0.0%	☆
The parameter is used to determine the value of swing and the value of sudden jump frequency. When the swing is set to Relative To Center frequency(E0.00=0), Swing (AW) = frequency source (F0.07) × swing amplitude((E0.01). When the swing is set to Relative To Maximum Frequency(E0.00=1), Swing (AW) = maximum frequency (F0.19) × swing amplitude((E0.01). If the sudden jump frequency range is selected for wobbulate operation, the frequency percentage of sudden jump frequency range relative to swing, i.e.: Sudden jump frequency = Swing(AW)×Sudden jump frequency range(E0.02). When the swing is set to Relative To Center frequency(E0.00=0), the sudden jump frequency is the variable value. When the swing is set to Relative To Middle Frequency(E0.00=1), the sudden jump frequency is the fixed value. The frequency of wobbulate operation is restricted by the upper and lower frequencies.					
E0.03	Wobbulate circle	0.1s~3000.0s		10.0s	☆
E0.04	Triangle wave rise time coefficient	0.1%~100.0%		50.0%	☆
Wobbulate cycle: The time of a complete wobbulate cycle. Triangle wave rise time coefficient(E0.04), the time percentage of Riangle Wave Rise Time relative to Wobbulate Cycle(E0.03) Triangle wave rise time = Wobbulate cycle(E0.03) × Triangle wave rise time coefficient(E0.04), unit: Second(s). Triangle wave drop time = Wobbulate cycle(E0.03) × (1 - Triangle wave rise time coefficient(E0.04)), unit: Second(s).					
E0.05	Set length	0m~65535m		1000m	☆
E0.06	Actual length	0m~65535m		0m	☆
E0.07	Pulse per meter	0.1~6553.5		100.0	☆
The above function codes are used to fixed-length control. The length information is sampled through the multi-function digital input terminal, the pulse number sampled by terminal divides the pulse per meter(E0.07), so then the Actual					

length(E0.06) can be computed out. When the Actual length is greater than the set length (E0.05), the multi-functional digital DO will output "Length Arrival" ON signal.

During the fixed-length control, the multifunction DI terminal can be used to reset length (DI function selects 28), please refer to F1.00 to F1.09 for details.

In some applications, the related input terminal function shall be set to "Length Count Input"(function 27), when the pulse frequency is higher, DI5 port must be used .

E0.08	Set count value	1~65535	1000	☆
E0.09	Specified count value	1~65535	1000	☆

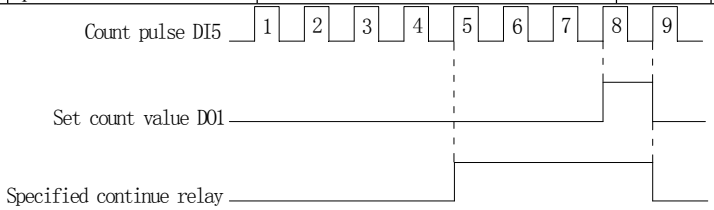

Figure5-26:Schematic diagram of the set count value reference and the specified value

The count value needs to be sampled through the multi-function digital input terminal. In some applications, the related input terminal function shall be set to "Counter Input"(function 25), when the pulse frequency is higher, DI5 port must be used .

When the count value reaches the set count value(E0.08), the multifunction digital DO will output "Set Count Value Arrival" ON signal, then the counter stops counting.

When the count value reaches the specified count value(E0.09), the multifunction digital DO will output "Specified Count Value Arrival" ON signal, then the counter continues to count, and then stop till the set count value.

The figure is the schematic diagram of E0.08 = 8 and E0.09 = 4.

5-2-15.Multi-stage command, simple PLC: E1.00 - E1.51

Code	Parameter name	Setting range	Factory setting	Change
E1.00	0-stage speed setting 0X	-100.0% to 100.0%	0.0%	☆
E1.01	1-stage speed setting 1X	-100.0% to 100.0%	0.0%	☆
E1.02	2-stage speed setting 2X	-100.0% to 100.0%	0.0%	☆
E1.03	3-stage speed setting 3X	-100.0% to 100.0%	0.0%	☆
E1.04	4-stage speed setting 4X	-100.0% to 100.0%	0.0%	☆
E1.05	5-stage speed setting 5X	-100.0% to 100.0%	0.0%	☆
E1.06	6-stage speed setting 6X	-100.0% to 100.0%	0.0%	☆
E1.07	7-stage speed setting 7X	-100.0% to 100.0%	0.0%	☆
E1.08	8-stage speed setting 8X	-100.0% to 100.0%	0.0%	☆
E1.09	9-stage speed setting 9X	-100.0% to 100.0%	0.0%	☆
E1.10	10-stage speed setting 10X	-100.0% to 100.0%	0.0%	☆
E1.11	11-stage speed setting 11X	-100.0% to 100.0%	0.0%	☆
E1.12	12-stage speed setting 12X	-100.0% to 100.0%	0.0%	☆
E1.13	13-stage speed setting 13X	-100.0% to 100.0%	0.0%	☆
E1.14	14-stage speed setting 14X	-100.0% to 100.0%	0.0%	☆
E1.15	15-stage speed setting 15X	-100.0% to 100.0%	0.0%	☆

The multi-stage command can be used as frequency source, can also act as the set source of process PID. The dimension of multi-stage command is the relative values and its range is from -100.0% to 100.0%, when it acts as the frequency source, it is the percentage of maximum frequency; due to the PID reference is originally as a relative value, therefore the multi-stage

command acts as the set source of PID and does not need dimension conversion.

The multi-stage command needs to switch according to the different states of multifunction digital DI, please refer to F1 group for specific instructions.

E1.16	Simple PLC running mode	stop after single running	0	0	☆
		hold final value after single running	1		
		circulating	2		

The figure is the schematic diagram of Simple PLC as the frequency source. For Simple PLC as the frequency source, the positive or negative value of E1.00 to E1.15 determines the running direction, the negative value indicates that the inverter runs at the opposite direction.

As the frequency source, PLC operates in three modes, including:

0: Stop after single running

After the inverter completes a single cycle, it will automatically shut down , the running command must be given before restart.

1: Hold final value after single running

After the inverter completes a single cycle, it will automatically maintain the frequency and direction of the last stage.

2: Circulating

After the inverter completes a cycle, it will automatically start next cycle, and stop till the stop command is given.

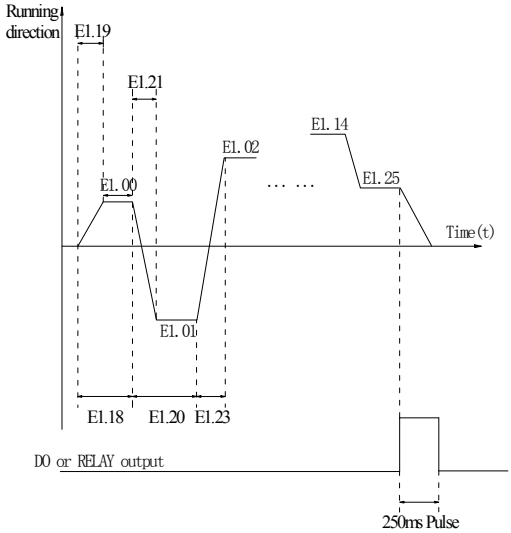

Figure5-27:Schematic diagram of simple PLC

E1.17	Simple PLC power-down memory selection	Units digit	power-down memory selection	00	☆
		power-down without memory	0		
		power-down with memory	1		
		Tens digit	stop memory selection		
		stop without memory	0		
		stop with memory	1		

PLC "Power-Down With Memory" means that the PLC operating stage and frequency before power-down are memorized, and then it will continue to run from the position of the memorized stage in next power-on. If Power-Down Without Memory is selected, the PLC process will restart from the starting position for each power-on

PLC "Stop With Memory" means that the PLC operating stage and frequency before stop are recorded, and then it will continue to run from the position of the recorded stage in next run. If

Stop Without Memory is selected, the PLC process will restart from the starting position for each start.				
E1.18	0 stage running time T0	0.0s(h) to 6500.0s(h)	0.0s(h)	☆
E1.19	0 stage ac/deceleration time selection	0 to 3	0	☆
E1.20	1 stage running time T1	0.0s(h) to 6500.0s(h)	0.0s(h)	☆
E1.21	1 stage ac/deceleration time selection	0 to 3	0	☆
E1.22	2 stage running time T2	0.0s(h) to 6500.0s(h)	0.0s(h)	☆
E1.23	2 stage ac/deceleration time selection	0 to 3	0	☆
E1.24	3 stage running time T3	0.0s(h) to 6500.0s(h)	0.0s(h)	☆
E1.25	3 stage ac/deceleration time selection	0 to 3	0	☆
E1.26	4 stage running time T4	0.0s(h) to 6500.0s(h)	0.0s(h)	☆
E1.27	4 stage ac/deceleration time selection	0 to 3	0	☆
E1.28	5 stage running time T5	0.0s(h) to 6500.0s(h)	0.0s(h)	☆
E1.29	5 stage ac/deceleration time selection	0 to 3	0	☆
E1.30	6 stage running time T6	0.0s(h) to 6500.0s(h)	0.0s(h)	☆
E1.31	6 stage ac/deceleration time selection	0 to 3	0	☆
E1.32	7 stage running time T7	0.0s(h) to 6500.0s(h)	0.0s(h)	☆
E1.33	7 stage ac/deceleration time selection	0 to 3	0	☆
E1.34	8 stage running time T8	0.0s(h) to 6500.0s(h)	0.0s(h)	☆
E1.35	8 stage ac/deceleration time selection	0 to 3	0	☆
E1.36	9 stage running time T9	0.0s(h) to 6500.0s(h)	0.0s(h)	☆
E1.37	9 stage ac/deceleration time selection	0 to 3	0	☆
E1.38	10 stage running time T10	0.0s(h) to 6500.0s(h)	0.0s(h)	☆
E1.39	10 stage ac/deceleration time selection	0 to 3	0	☆
E1.40	11 stage running time T11	0.0s(h) to 6500.0s(h)	0.0s(h)	☆
E1.41	11 stage ac/deceleration time selection	0 to 3	0	☆
E1.42	12 stage running time T12	0.0s(h) to 6500.0s(h)	0.0s(h)	☆
E1.43	12 stage ac/deceleration time selection	0 to 3	0	☆
E1.44	13 stage running time T13	0.0s(h) to 6500.0s(h)	0.0s(h)	☆
E1.45	13 stage ac/deceleration time selection	0 to 3	0	☆
E1.46	14 stage running time T14	0.0s(h) to 6500.0s(h)	0.0s(h)	☆
E1.47	14 stage ac/deceleration time selection	0 to 3	0	☆
E1.48	15 stage running time T15	0.0s(h) to 6500.0s(h)	0.0s(h)	☆
E1.49	15 stage ac/deceleration time selection	0 to 3	0	☆

Multi-speed operation and deceleration time selection 0 to 3 , corresponding to the function code:

0: F0.13,F0.14	2: F7.10,F7.11
1: F7.08,F7.09	3: F7.12,F7.13

E1.50	Simple PLC run-time unit	S(seconds)	0	0	☆
		H(hours)	1		
E1.51	Multi-stage command 0 reference manner	Function code E1.00 reference	0	0	☆
		Analog AI1 reference	1		
		Analog AI2 reference	2		
		Panel potentiometer setting	3		
		High-speed pulse setting	4		
		PID control setting	5		
		Keyboard set frequency (F0.01) setting, UP/DOWN can be modified	6		

		Analog AI3 reference	7		
This parameter determines the multi-stage command 0 reference channel. The multi-stage command 0 not only can select E1.00, but also there are a variety of other options so as to facilitate switching between the multi-stage command and the other reference manner.					

5-2-16.PID function: E2.00-E2.27

PID control is a commonly used method of process control, a closed loop system is formed by the proportional, integral and differential operation of difference between the controlled value feedback signal and target value signal and by adjusting the inverter output frequency so as to stabilize the controlled value at the position of the target value.Suitable for flow control, pressure control and temperature control and other process control applications.

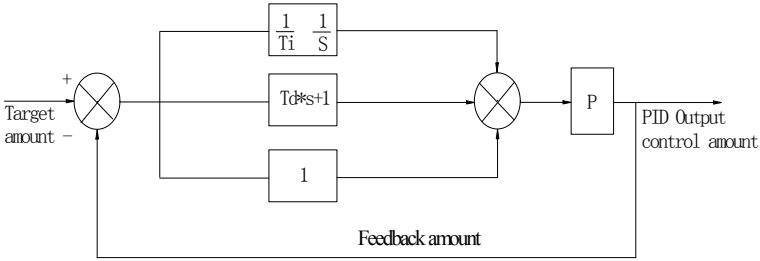

Figure5-28:Flow diagram of process PID principle

Code	Parameter name	Setting range		Factory setting	Change
E2.00	PID setting source	E2.01 setting	0	0	☆`
		Analog AI1 reference	1		
		Analog AI2 reference	2		
		Panel potentiometer setting	3		
		High-speed pulse setting	4		
		Communications reference	5		
		Multi-stage command reference	6		
		Analog AI3 reference	7		
E2.01	PID keyboard reference	0.0% to 100.0%		50.0%	☆
This parameter is used to select the process PID target value reference channel. The set target value of process PID is a relative value, the setting range is from 0.0% to 100.0%. The feedback value of PID is also a relative value, the role of PID is to remain the same for the two relative values.					
E2.02	PID feedback source	Analog AI1 reference	0	0	☆
		Analog AI2 reference	1		
		Panel potentiometer setting	2		
		AI1-AI2 reference	3		
		High-speed pulse setting	4		
		Communications reference	5		
		AI1+AI2 reference	6		
		MAX(|AI1|, |AI2|) reference	7		
		MIN (|AI1|, |AI2|) reference	8		
		Analog AI3 reference	9		
This parameter is used to select the process PID feedback signal channel.The feedback value of process PID is also a relative value, the setting range is from 0.0% to 100.0%.					
E2.03	PID action direction	Positive	0	0	☆
		negative	1		

E2.04	PID reference feedback range	0 to 65535	1000	☆

PID reference feedback range is a dimensionsless unit for PID setting display(d0.15) and PID feedback display(d0.16).

The 100.0% of the relative value of PID reference feedback corresponds to a setting feedback range(E2.04). If E2.04 is set to 2000, when PID setting is 100.0%, PID setting display(d0.15) will be 2000.

E2.05	PID inversion cutoff frequency	0.00 to F0.19(Maximum frequency)	0.00Hz	☆

In some cases, only when the PID output frequency is negative (i.e.the inverter reverses), PID can control the reference value and the feedback value to the same states, but the excessive inversion frequency is not allowed in some occasions, E2.05 is used to the upper limit of determine inversion frequency.

E2.06	PID deviation limit	0.0% to 100.0%	0.0%	☆

When the deviation between PID reference value and PID feedback value is less than E2.06, PID will stop regulating action. Thus, when the deviation is lesser, the output frequency will be stable, it is especially effective for some closed-loop control occasions.

E2.07	PID differential limiting	0.00% to 100.00%	0.10%	☆

The role of the differential is more sensitive in PID regulator, is likely to cause system oscillation, generally the role is limited to a smaller range, E2.07 is used to set PID differential output range.

E2.08	PID reference change time	0.00s to 650.00s	0.00s	☆

The PID reference change time means the required time that PID reference value changes from 0.0% to 100.0%.When the PID reference changes, the PID reference value will change linearly according to the reference change time to reduce the adverse effects to the system caused by a sudden reference change.

E2.09	PID feedback filter time	0.00s to 60.00s	0.00s	☆
E2.10	PID output filter time	0.00s to 60.00s	0.00s	☆

E2.09 is used for filtering the PID feedback quantity, the filter helps reduce the influence of interference to the feedback quantity, but will bring the response performance of the process closed loop system.

E2.10 is used for filtering the PID output frequency, the filter will weaken the sudden change of the inverter output frequency, but it will also bring the response performance of the process closed loop system.

E2.11	PID feedback loss detection value	0.0%: Not judged feedback loss 0.1% to 100.0%	0.0%	☆
E2.12	PID feedback loss detection time	0.0s to 20.0s	0.0s	☆

This function code is used to determine whether the PID feedback is lost or not.

When the PID feedback is less than the PID feedback loss detection value(E2.11), and the duration is longer than the PID feedback loss detection time(E2.12), the inverter will alarm fault ID Err.31, and troubleshoot according to the selected method.

E2.13	Proportional gain KP1	0.0 to 200.0	80.0	☆
E2.14	Integration time Ti1	0.01s to 10.00s	0.50s	☆
E2.15	Differential time Td1	0.00s to 10.000s	0.000s	☆

Proportional gain KP1:Used to decide the extent of the PID regulator, the greater KP1, the greater adjusting extent. This parameter 100.0 means that when the deviation of PID feedback value and reference value is 100.0%, the PID regulator will adjust the output frequency command to the maximum frequency.

Integration time Ti1: Used to decide the extent of integral adjustment of the PID regulator. The shorter integration time, the greater extent of integral adjustment The integration time means that when the deviation of PID feedback value and reference value is 100.0%, the integration regulator will successively adjust to the maximum frequency for the time.

Differential time Td1: Used to decide the extent that the PID regulator adjusts the deviation change rate. The longer differential time, the greater extent of adjustment The differential time

means that the feedback value changes 100.0% within the time, the differential regulator will adjust to the maximum frequency.

E2.16	Proportional gain KP2	0.0 to 200.0		20.0	☆
E2.17	Integration time Ti2	0.01s to 10.00s		2.00s	☆
E2.18	Differential time Td2	0.00s to 10.000s		0.000s	☆
E2.19	PID parameter switching conditions PID parameter switching deviation 1	no switching	0	0	☆
		switching via terminals	1		
		automatically switching according to deviation.	2		
E2.20	Proportional gain KP2	0.0% to E2.21		20.0%	☆
E2.21	Integration time Ti2	E2.20 to 100.0%		80.0%	☆

In some applications, only one group of PID parameters can not meet the needs of the entire run, it is required to use different PID parameters under different conditions.

This group of function codes is used to switch between two groups of PID parameters. Which the setting method for regulator parameter(E2.16 to E2.18) is similar to the parameter(E2.13 to E2.15).The two groups of PID parameters can be switched by the multi-functional digital DI terminal, can also be switched automatically according to the PID deviation.If you select the multi-functional DI terminal, the multi-function terminal function selection shall be set to 43 (PID parameter switching terminal), select parameter group 1 (E2.13 E2.15) when the terminal is inactive, otherwise select parameter group 2 (E2.16 to E2.18).

If you select the automatic switch mode, and when the absolute value of deviation between reference and feedback parameters is less than PID parameter switching deviation 1(E2.20), select parameter group 1 for PID parameter. When the absolute value of deviation between reference and feedback parameters is more than PID parameter switching deviation 2(E2.21), select parameter group 2 for PID parameter. If the deviation between reference and feedback parameters is between switching deviation 1 and switching deviation 2, PID parameter is the linear interpolation of the two groups of PID parameters , as shown in the figure.

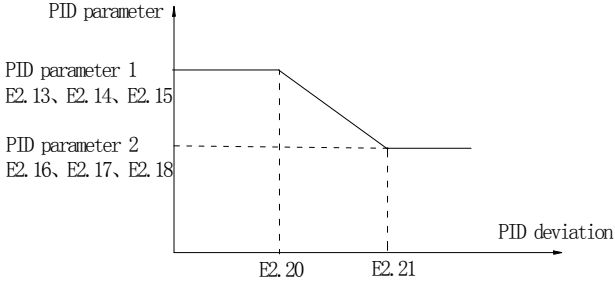

Figure5-29:PID parameter switch

E2.22	PID integral properties	Units digit: integral separation		00	☆
		Invalid	0		
		Valid	1		
		Tens digit: whether stop integration when output reaches limit			
		continue	0		
		stop integral	1		

Integral separation:If the integral separation is set to active, when the integral pause of multifunction digital DI(function 38) is active, PID integral will stop operations, at the time only the proportional and derivative actions of PID is active.If the integral separation is set to inactive, however the multifunction digital DI is active or inactive, the integral separation will be inactive. Whether stop integration when output reaches limit: you can select whether or not to stop the

integral action after PID operation output reaches the maximum or the minimum value.If you select to stop the integral action, the PID integral will stop the calculation, which may help to reduce the overshoot of PID.

E2.23	PID initial value	0.0%~100.0%(Max frequency)	0.0%	☆
E2.24	PID initial value hold time	0.00s~360.00s	0.00s	☆

When the inverter starts, PID output is fixed at PID initial value(E2.23), and then continuous for the PID initial value hold time(E2.24), at last PID begins operation of the closed-loop adjustment.

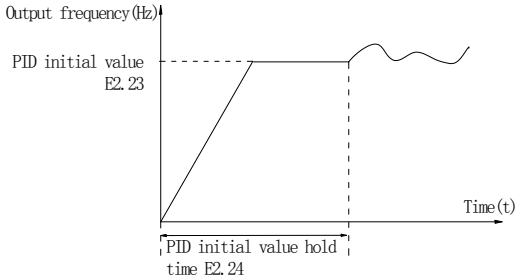

Figure5-30:functional schematic of PID initial value.

E2.25	Maximum deviation of twice outputs(forward)	0.00% to 100.00%	1.00%	☆
E2.26	Maximum deviation of twice outputs (backward)	0.00% to 100.00%	1.00%	☆

This function is used to limit the deviation between two PID output beats(2ms/beats), in order to suppress the too fast changes of PID output so that stabilizing the inverter operation.

E2.25 and E2.26 respectively corresponds to the maximum of the absolute value of output deviation when rotating forward and reverse.

E2.27	Computing status after PID stop	Stop without computing	0	1	☆
		Stop with computing	1		

Used to select whether to continue computing in the state of PID shutdown. Generally, PID will stop computing in the state of shutdown.

5-2-17.Virtual DI,Virtual DO: E3.00 - E3.21

Code	Parameter name	Setting range	Factory setting	Change
E3.00	Virtual VDI1 terminal function selection	0 to 50	0	★
E3.01	Virtual VDI2 terminal function selection	0 to 50	0	★
E3.02	Virtual VDI3 terminal function selection	0 to 50	0	★
E3.03	Virtual VDI4 terminal function selection	0 to 50	0	★
E3.04	Virtual VDI5 terminal function selection	0 to 50	0	★

Virtual VDI1 ~ VDI5 on the function, are exactly as same as the DI on the control panel, can be used as a multi-function digital quantity input, the details please refer to the F1.00 ~ F1.09 is introduced.

E3.05	Virtual VDI effective status set mode	Units digit	Virtual VDI1	00000	★
		Invalid	0		
		Valid	1		
		Tens digit	Virtual VDI2 (0-1, same as unit digit)		
		Hundreds digit	Virtual VDI3 (0-1, same as unit digit)		
		Thousands digit	Virtual VDI4 (0-1, same as unit digit)		
		Ten thousands digit	Virtual VDI5 (0-1, same as unit digit)		

E3.06	Virtual VDI status set	Units digit	Virtual VDI1	11111	★
		VD1 whether valid is decided by Virtual VDOX status	0		
		VD1 whether valid is decided by Virtual VDOX status	1		
		Tens digit	Virtual VDI2 (0-1, same as unit digit)		
		Hundreds digit	Virtual VDI3 (0-1, same as unit digit)		
		Thousands digit	Virtual VDI4 (0-1, same as unit digit)		
		Ten thousands digit	Virtual VDI5 (0-1, same as unit digit)		

Different from ordinary digital quantity input terminals, virtual VDI state can have two setting modes which is selected by E3.06.

When selecting VDI state is determined by the state of the corresponding virtual VDO, VDI is valid or invalid state depending on the VDO output valid or invalid, and VDIx only binding VDOx(x=1~5).

When choosing VDI state selection function code to set, through the binary bits of E3.05, respectively determine the state of virtual input terminals.

Example of how to use VDI.

Example 1. Implement following function: “Inverter fault alarm and shuts down when AI1 input exceeds upper or lower frequency” .

Realize by following settings: Set VDI state decided by VDO, set VDI1 function as “ user defined fault 1” (E3.00=44); set VDI1 terminal state effective mode decided by VDO1 (E3.06=xxx0); set VDO1 output function as “AI1 input exceeds upper & lower frequency” (E3.11=31); so when AI1 input exceeds upper or lower frequency, VDO1 state is ON, VDI1 input terminal state is effective, VDI1 receive user defined fault 1, inverter then alarm fault no. 27 and shuts down.

Example 2. Implement following function: “Inverter run automatically after power-on”.

Realize by following settings: Set VDI state decided by function code E3.05, set VDI1 function as “FORWARD” (E3.00=1); set VDI1 terminal state effective decided by function code (E3.06=xxx1); set VDI1 terminal state is effective (E3.05=xxx1); set command source as “terminal control” (F0.11=1); set protection selection as “no protection” (F7.22=0); so after inverter powered on and initialization complete, VDI1 detected effective, and it match forward running, then inverter starts running forwardly.

E3.07	AI1 terminal as a function selection of DI	0 to 50	0	★
E3.08	AI2 terminal as a function selection of DI	0 to 50	0	★
E3.09	reserve			

E3.10	AI terminal as a function selection of DI	Units digit	AI1	000	★
		High level effectively	0		
		low level effectively	1		
		Tens digit	AI2(Same as units digit)		
		Hundreds digit	AI3(Same as units digit)		

This group function code is used when using AI as DI, when AI used as DI, and input voltage of AI is greater than 7V, AI terminal status will be high level, when input voltage of AI is lower than 3V, AI terminal status will be low level. For between 3V~ 7V hysteresis E3.10 is to determine that when the AI is used as DI, AI is made valid by means of the high level state, or the low level of valid states. As for AI as DI feature set, same as the ordinary DI Settings, please refer to the F1 group setting instructions related DI. Below figure is AI input voltage taken as an example, explains the relationship between input voltage of AI and the corresponding state of DI:

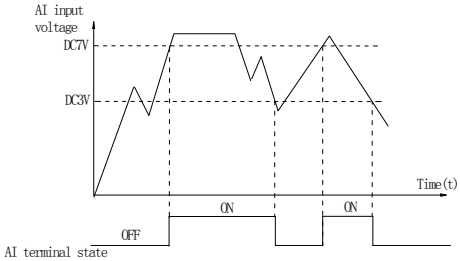

Figure5-31:Judgment of effective state of AI

E3.11	VDO1 output function	With the physical internal sub DIx	0	0	☆
		See F2 group physical DO output option	1 to 40		
E3.12	VDO2 output function	With the physical internal sub DIx	0	0	☆
		See F2 group physical DO output option	1 to 40		
E3.13	VDO3 output function	With the physical internal sub DIx	0	0	☆
		See F2 group physical DO output option	1 to 40		
E3.14	VDO4 output function	With the physical internal sub DIx	0	0	☆
		See F2 group physical DO output option	1 to 40		
E3.15	VDO5 output function	With the physical internal sub DIx	0	0	☆
		See F2 group physical DO output option	1 to 40		
E3.16	VDO output effective status	Units digit	VDO1	00000	☆
		Positive logic	0		
		Negative logic	1		
		Tens digit	VDO2(0 to 1,same as above)		
		Hundreds digit	VDO3(0 to 1,same as above)		
		Thousands digit	VDO4(0 to 1,same as above)		
		Ten thousands digit	VDO5(0 to 1,same as above)		
E3.17	VDO1 output delay time	0.0s to 3600.0s		0.0s	☆
E3.18	VDO2 output delay time	0.0s to 3600.0s		0.0s	☆
E3.19	VDO3 output delay time	0.0s to 3600.0s		0.0s	☆
E3.20	VDO4 output delay time	0.0s to 3600.0s		0.0s	☆
E3.21	VDO5 output delay time	0.0s to 3600.0s		0.0s	☆

VDO and DO output function is similar,can be used in conjunction with VDIx,to achieve some simple logic control .

When VDOx output function is 0, output status is decided by DI1~DI5 input status on the control board, VDOx and Dix one-to-one correspondence.

When the output function selection is not 0, VD0x function setting and using method is same as D0 in F2 output parameter, please read F2 group parameter description.

The VDOx output valid status can be set by E3.16 setting, select positive logic or anti-logic.

5-2-18.Motor parameters: b0.00-b0.35

Code	Parameter name	Setting range	Factory setting	Change
b0.00	Motor type	Permanent magnet synchronous motor	2	★
b0.01	Rated power	0.1kW to 1000.0kW	-	★
b0.02	Rated voltage	1V to 2000V	-	★
b0.03	Rated current	0.01A to 655.35A(Inverter power≤55kW) 0.1A to 6553.5A(Inverter power >55kW)	-	★
b0.04	Rated frequency	0.01Hz to F0.19(Maximum frequency)	-	★
b0.05	Rated speed	1rpm to 36000rpm	-	★

Above b0.00 to b0.05 are the motor nameplate parameters, which affects the accuracy of the measured parameters. Please set up according to the motor nameplate parameters. The excellent vector control performance needs the accurate motor parameters. The accurate identification of parameters is derived from the correct setting of rated motor parameters.

In order to guarantee the control performance, please configure your motor according to the inverter standards, the motor rated current is limited to between 30% to 100% of the inverter rated current. The motor rated current can be set, but can not exceed the inverter rated current. This parameter can be used to determine the inverter's overload protection capacity and energy efficiency for the motor.

It is used for the prevention of overheating caused by the self-cooled motor at low speed , or to correct for protecting the motor when the little change of the motor characteristics may affect the changes of the motor capacity.

b0.06	Asynchronous motor stator resistance	0.001Ω to 65.535Ω(Inverter power≤55kW) 0.0001Ω to 6.5535Ω(Inverter power>55kW)	-	★
b0.07	Asynchronous motor rotor resistance	0.001Ω to 65.535Ω(Inverter power≤55kW) 0.0001Ω to 6.5535Ω(Inverter power>55kW)	-	★
b0.08	Asynchronous motor leakage inductance	0.01mH to 655.35mH(Inverter power≤55kW) 0.001mH to 65.535mH(Inverter power>55kW)	-	★
b0.09	Asynchronous motor mutUal inductance	0.01mH to 655.35mH(Inverter power≤55kW) 0.001mH to 65.535mH(Inverter power>55kW)	-	★
b0.10	Asynchronous motor no-load current	0.01A to b0.03(Inverter power≤55kW) 0.1A to b0.03(Inverter power>55kW)	-	★

b0.06 to b0.10 are the asynchronous motor parameters, and generally these parameters will not appear on the motor nameplate and can be obtained by the inverter auto tuning. Among which, only three parameters of b0.06 to b0.08 can be obtained by Asynchronous Motor Parameters Still Auto tuning; however, not only all five parameters but also encoder phase sequence and current loop PI parameters can be obtained by Asynchronous Motor Parameters Comprehensive Auto tuning

When modifying the motor's rated power (b0.01) or rated voltage (b0.02), the inverter will automatically calculate and modify the parameter values of b0.06 to b0.10 , and restore these 5 parameters to the motor parameters of commonly used standard Y Series.

If the asynchronous motor parameters auto tuning can not be achieved on-site, you can enter the corresponding above parameters according to the parameters provided by the manufacturer.

b0.11	Synchronous motor stator resistance	0.001Ω to 65.535Ω(Inverter power≤55kW) 0.0001Ω` to 6.5535Ω(Inverter power>55kW)	-	★
b0.12	Synchronous D-axis inductance	0.01mH to 655.35mH(Inverter power≤55kW) 0.001mH to 65.535mH(Inverter power>55kW)	-	★
b0.13	Synchronous Q-axis inductance	0.01mH to 655.35mH(Inverter power≤55kW) 0.001mH to 65.535mH(Inverter power>55kW)	-	★
b0.14	Synchronous counter EMF coefficient	0.1V to 6553.5V	-	★
b0.15 to b0.26	Reserve			

b0.27	Motor parameter auto tuning	No operation	0	0	★
		Synchronous motor parameters still auto tuning	11		
		Synchronous motor parameters comprehensive auto tuning	12		

If the motor is able to disengage the load, in order to obtain a better operating performance, you can choose comprehensive auto tuning; otherwise, you can only select parameters still auto tuning. Firstly set the parameter according to load condition, and then press RUN key, the inverter will perform parameters auto tuning. Parameters auto tuning can be performed only under keyboard operation mode, is not suitable for terminal operation mode and communication operation mode.

0: No operation, which prohibits parameters auto tnning.

11: Synchronous motor parameters still auto tuning

Motor type and motor nameplate parameters b0.00 to b0.05 must be set correctly before performing synchronous motor parameter auto tuning with load. For synchronous motor parameters auto tuning with load,the inverter can obtain the initial position angle, and this is the necessary condition of normal operation of synchronous motor, therefore synchronous motor must perform parameters auto tuning for the first installation and before the initial use.

12: Synchronous motor parameters comprehensive auto tuning

During synchronous motor parameters auto tuning without load , the inverter firstly perform parameters auto tuning with load,and then accelerates up to F0.01 according to the acceleration time F0.13, after a period of time, and then decelerates till stop according to the deceleration time F0.14 to end auto tuning. Please note that F0.01 must be set to a non-zero value when performing identification operation.

Before performing synchronous motor parameters auto tuning without load, not only motor type and motor nameplate parameters b0.00 to b0.05 must be set properly, but also encoder pulses b0.29, encoder type b0.28, encoder pole-pairs b0.35.

For synchronous motor parameter auto tuning without load,the inverter can obtain not only b0.11 to b0.14 motor parameters, as well as encoder information b0.30 b0.31 b0.32, b0.33, vector control current loop PI parameters F5.12 to F5.15.

Note: Motor parameter auto tuning can only be operated under keyboard control mode,under terminal and communication control mode the auto tuning function is invalid.

b0.28	Encoder type	ABZ incremental encoder	0	0	★
		UVW incremental encoder	1		
		Rotational transformer	2		
		Sine and cosine encoder	3		
		Wire-saving UVW encoder	4		

PI550-E supports multiple encoder types, the different encoders need different PG card, please correctly choose PG card. Synchronous motor can choose any of the 5 kinds of encoder, asynchronous motors generally only choose ABZ incremental encoder and rotational transformer.

PG card is installed, it is necessary to correctly set b0.28 according to the Actual situation, otherwise the inverter may not play correctly.

b0.29	Encoder every turn pulse number	1 to 65535	2500	★

Set ABZ or UVW incremental encoder per rotation pulses.

In vector control with PG, we must correct the parameter, otherwise the motor will not run properly

b0.30	Encoder installation angle	0.00 to 359.90	0.00	★

Current detection compensation for setting inverter control,if it is set too large which may cause performance degradation. Generlly do not need to change,The parameter is only valid to synchronous motors control, and it is valid to ABZ incremental encoder, UVW incremental encoder, rotational transformer, wire-saving UVW encoder, while invalid to sine and cosine encoders.

The parameter can used for obtaining parameters when performing synchronous motor parameters still auto tuning and synchronous motor parameters comprehensive auto tuning, and it is very important to the operation of asynchronous motors, therefore after the asynchronous motor is first installed, the motor parameter auto tuning must be performed for functioning correctly.

b0.31	ABZ incremental encoder AB phase sequence	Forward	0	0	★
		Reverse	1		

The function code is only valid to ABZ incremental encoder, that is valid only when b0.28 = 0. It is used to set the AB signal phase sequence of ABZ incremental encoder.

b0.32	UVW encoder offset angle	0.00 to 359.90		0.00	★
b0.33	UVW encoder UVW phase sequence	Forward	0	0	★
		Reverse	1		

The two parameters are valid only for synchronous motor with UVW encoder.

The two parameters can used for obtaining parameters when performing synchronous motor parameters still auto tuning and synchronous motor parameters comprehensive auto tuning, and the two parameters are very important to the operation of asynchronous motors, therefore after the asynchronous motor is first installed, the motor parameter auto tuning must be performed for functioning correctly.

b0.34	speed feedback PG disconnection detection time	0.0s: OFF 0.1s to 10.0s	0.0s	★

It is used to set encoder disconnection fault detection time, when it is set to 0.0s, the inverter does not detect the disconnection fault of encoder.

When the inverter detects a disconnection fault, and the fault lasts for more than b0.34 set time, the inverter gives out Alarm Err.20. message.

b0.35	Pole-pairs of rotary transformer	1 to 65535	1	★

The rotary transformer has pole-pairs, the correct pole-pairs parameters must be set when using the kind of encoder.

5-2-19.Function code management: y0.00-y0.04

Code	Parameter name	Setting range		Factory setting	Change
y0.00	Parameter initialization	No operation	0	0	★
		Restore the factory parameters, not including motor parameters	1		
		Clear history	2		
		Restore default parameter values, including motor parameters	3		
		Backup current user parameters	4		
		Restore user backup parameters	501		
		Clear keyboard storage area	10		
		upload parameter to keyboard storage area 1	11		
		upload parameter to keyboard storage area 2	12		
		download the parameters from keyboard storage 1 area to the storage system	21		
		download the parameters from keyboard storage 2 area to the storage system	22		

1: Restore the factory setting, not including motor parameters:After y0.00 is set to 1, most of the inverter function parameters are restored to the factory default parameters, but motor parameters, frequency command decimal point (F0.02), fault recording information, cumulative running time , cumulative power-on time and cumulative power consumption will not be restored.

2: Clear history:to clear the history of the inverter's fault recording information, cumulative running time , cumulative power-on time and cumulative power consumption.

3: Restore default parameter values including motor parameters.

4: backup current user parameters:backup the parameters set by the current user. Backup all function parameters. It is easy to restore the default settings when user incorrectly adjust parameters.

501Restore user backup parameters:Restore previous backup user parameters.

10:Clear keyboard storage area:Empty keyboard storage area 1 and keyboard storage area 2

11: Upload parameter to keyboard storage area 1:Upload the parameters of the inverter to keyboard storage area 1.

12: Upload parameter to keyboard storage area 2:Upload the parameters of the inverter to the keyboard storage area 2.

21: Download the parameters from keyboard storage 1 area to the storage system:Download the parameters from keyboard storage 1 to inverter

22:download the parameters from keyboard storage 2 area to the storage system:Download

the parameters from keyboard storage 2 to inverter				
y0.01	User password	0 to 65535	0	☆
When y0.01 is set to one any non-zero number, the password protection will take effect. You enter the menu for the next time, you must enter the password correctly, otherwise can not view and modify the function parameters, please keep in mind the set user password. When y0.01 is set to 0, the set user password will be cleared, the password protection function is invalid.				
y0.02	Function parameters display properties	Units digit: d group display selection Not display: 0 Display: 1 Tens digit: E group display selection Not display: 0 Display: 1 Hundreds digit: b group display selection Not display: 0 Display: 1 Thousands digit: y1 group display selection Not display: 0 Display: 1 Ten thousands digit: L group display selection Not display: 0 Display: 1	11111	★
y0.03	User Parameters display	Units digit:Reserved Tens digit: User's change parameter display selection 0: Not display;1: Display	00	☆
y0.04	Parameter protection	Modifiable: 0 Not modifiable: 1	0	☆
User can set whether function code parameter can be modified or not, so as to prevent the risk that function parameters are altered unexpectedly. If the function code is set to 0, all function code can be modified; while it is set to 1, all function code can only be viewed, can not be modified.				

5-2-20.Fault query:y1.00-y1.30

Code	Parameter name	Setting range	Factory setting	Change
y1.00	Type of the first fault	0 to 51	-	●
y1.01	Type of the second fault	0 to 51	-	●
y1.02	Type of the third(at last) fault	0 to 51	-	●

Record the type of the last three faults of inverter, 0 for no fault. Please refer to the related instructions for the possible causes and solutions for each fault code.

Failure type table:

No.	Failure type	No.	Failure type
0	No fault	20	Encoder/PG card abnormal
1	Inverter unit protection	21	Parameter read and write abnormal
2	Acceleration overcurrent	22	Inverter hardware abnormal
3	Deceleration overcurrent	23	Motor short to ground
4	Constant speed overcurrent	24	Reserve
5	Acceleration overvoltage	25	Reserve
6	Deceleration overvoltage	26	Running time arrival
7	Constant speed overvoltage	27	Custom fault 1

	8	Control power failure	28	Custom fault 2
	9	Undervoltage	29	Power-on time arrival
	10	Inverter overload	30	Off load
	11	Motor Overload	31	PID feedback loss when running
	12	Input phase loss	40	Fast current limiting timeout
	13	Output phase loss	41	Switch motor when running
	14	Module overheating	42	Too large speed deviation
	15	External fault	43	Motor over-speed
	16	Communication abnormal	45	Motor overtemperature
	17	Contactor abnormal	51	Initial position error
	18	Current detection abnormal	-	COF communication failure
	19	Motor auto tuning abnormal		

y1.03	Frequency of the third fault	Frequency of the last fault	●
y1.04	Current of the third fault	Current of the last fault	●
y1.05	Bus voltage of the third fault	Bus voltage of the last fault	●
y1.06	Input terminal status of the third fault	Input terminal status of the last fault, the order is: BIT9 BIT8 BIT7 BIT6 BIT5 BIT4 BIT3 BIT2 BIT1 BIT0 DI0 DI9 DI8 DI7 DI6 DI5 DI4 DI3 DI2 DI1 When the input terminal is ON, the corresponding binary bits is 1, OFF is 0, all DI status is converted to the decimal number for display.	●
y1.07	Output terminal status of the third fault	Output terminal status of the last fault, the order is: BIT4 BIT3 BIT2 BIT1 BIT0 REL2 SPA Reserve REL1 SPB When the output terminal is ON, the corresponding binary bits is 1, OFF is 0, all DI status is converted to the decimal number for display.	●
y1.08	Reserved		
y1.09	Power-on time of the third fault	Current power-on time of the last fault	●
y1.10	Running time of the third fault	Current running time of the last fault	●
y1.11 to y1.12	Reserve		
y1.13	Frequency of the second fault	Frequency of the last fault	●
y1.14	Current of the second fault	Current of the last fault	●
y1.15	Bus voltage of the second fault	Bus voltage of the last fault	●
y1.16	Input terminal status of the second fault	Input terminal status of the last fault, the order is: BIT9 BIT8 BIT7 BIT6 BIT5 BIT4 BIT3 BIT2 BIT1 BIT0 DI0 DI9 DI8 DI7 DI6 DI5 DI4 DI3 DI2 DI1 When the input terminal is ON, the corresponding binary bits is 1, OFF is 0, all DI status is converted to the decimal number for display.	●
y1.17	Output terminal status of the second fault	Output terminal status of the last fault, the order is:	●

		BIT4 BIT3 BIT2 BIT1 BIT0 REL2 SPA Reserve REL1 SPB When the output terminal is ON, the corresponding binary bits is 1, OFF is 0, all DI status is converted to the decimal number for display.	
y1.18	Reserved		
y1.19	Power-on time of the second fault	Current power-on time of the last fault	●
y1.20	Running time of the second fault	Current running time of the last fault	●
y1.11 to y1.12	Reserve		
y1.23	Frequency of the first fault	Frequency of the last fault	●
y1.24	Current of the first fault	Current of the last fault	●
y1.25	Bus voltage of the first fault	Bus voltage of the last fault	●
y1.26	Input terminal status of the first fault	Input terminal status of the last fault, the order is: BIT9 BIT8 BIT7 BIT6 BIT5 BIT4 BIT3 BIT2 BIT1 BIT0 DI0 DI9 DI8 DI7 DI6 DI5 DI4 DI3 DI2 DI1 When the input terminal is ON, the corresponding binary bits is 1, OFF is 0, all DI status is converted to the decimal number for display.	●
y1.27	Output terminal status of the first fault	Output terminal status of the last fault, the order is: BIT4 BIT3 BIT2 BIT1 BIT0 REL2 SPA Reserve REL1 SPB When the output terminal is ON, the corresponding binary bits is 1, OFF is 0, all DI status is converted to the decimal number for display.	●
y1.28	Reserved		
y1.29	Power-on time of the first fault	Current power-on time of the last fault	●
y1.30	Running time of the first fault	Current running time of the last fault	●

Chapter 6 Troubleshooting

PI550-E can provide effective protection when the equipment performance is played fully. The following faults may appear in the process of use, please refer to the following table to analyze the possible causes and then trouble shoot.

In case of damage to the equipment and the reasons that can not solved, please contact with your local dealers/agents, or directly contact with the manufacturers to seek solutions.

6-1.Fault alarm and countermeasures

PI550-E can provide effective protection when the equipment performance is played fully. In case of abnormal fault, the protection function will be invoked, the inverter will stop output, and the faulty relay contact of the inverter will start, and the fault code will be displayed on the display panel of the inverter. Before consulting the service department, user can perform self-check , analyze the fault cause and find out the solution according to the instructions of this chapter. If the fault is caused by the reasons as described in the dotted frame, please consult the agents of inverter or directly contact with our company.

No.	Fault ID	Failure type	Possible causes	Solutions
1	Err.01	Inverter unit protection	1.The short circuit of inverter output happens 2.The wiring for the motor and the inverter is too long 3.Module overheating 4.The internal wiring of inverter is loose 5.The main control panel is abnormal 6.The drive panel is abnormal. 7.The inverter module is abnormal	1.Eliminate peripheral faults 2.Additionally install the reactor or the output filter 3.Check the air duct is blocked or not and the fan is working normally or not, and eliminate problems 4.Correctly plug all cables 5.Seek for technical support
2	Err.02	Acceleration overcurrent	1.The acceleration time is too short 2.Manual torque boost or V/F curve is not suitable 3.The voltage is low 4.The short-circuit or earthing of inverter output happens 5.The control mode is vector and without identification of parameters 6.The motor that is rotating is started unexpectedly. 7.Suddenly increase the load in the process of acceleration. 8.The type selection of inverter is small	1.Increase acceleration time 2.Adjust manual torque boost or V/F curve 3.Set the voltage to the normal range 4.Eliminate peripheral faults 5.Perform identification for the motor parameters 6.Select Speed Tracking Start or restart after stopping the motor. 7.Cancel the sudden load 8.Choose the inverter with large power level
3	Err.03	Deceleration overcurrent	1.The short-circuit or earthing of inverter output happens	1.Eliminate peripheral faults 2.Perform identification for the motor parameters

No.	Fault ID	Failure type	Possible causes	Solutions
			2.The control mode is vector and without identification of parameters 3.The deceleration time is too short 4.The voltage is low 5.Suddenly increase the load in the process of deceleration. 6.Didn't install braking unit and braking resistor	3.Increase the deceleration time 4.Set the voltage to the normal range 5.Cancel the sudden load 6.Install braking unit and brake resistor
4	Err.04	Constant speed overcurrent	1.The short-circuit or earthing of inverter output happens 2.The control mode is vector and without identification of parameters 3.The voltage is low 4.Whether suddenly increase the load when running 5.The type selection of inverter is small	1.Eliminate peripheral faults 2.Perform identification for the motor parameters 3.Set the voltage to the normal range 4.Cancel the sudden load 5.Choose the inverter with large power level
5	Err.05	Acceleration overvoltage	1.Didn't install braking unit and braking resistor 2.The input voltage is high 3.There is external force to drag the motor to run when accelerating. 4.The acceleration time is too short	1.Install braking unit and brake resistor 2.Set the voltage to the normal range 3.Cancel the external force or install braking resistor. 4.Increase acceleration time
6	Err.06	Deceleration overvoltage	1.The input voltage is high 2.There is external force to drag the motor to run when decelerating. 3.The deceleration time is too short 4.Didn't install braking unit and braking resistor	1.Set the voltage to the normal range 2.Cancel the external force or install braking resistor. 3.Increase the deceleration time 4.Install braking unit and brake resistor
7	Err.07	Constant speed overvoltage	1.There is external force to drag the motor to run when running 2.The input voltage is high	1.Cancel the external force or install braking resistor. 2.Set the voltage to the normal range
8	Err.08	Control power failure	The range of input voltage is not within the specification	Adjust the voltage to the range of the requirements of specification
9	Err.09	Under voltage fault	1.The momentary power cut 2.The inverter's input voltage is not within the specification 3.The bus voltage is not normal 4.The rectifier bridge and buffer resistance are abnormal 5.The drive panel is	1.Reset fault 2.Adjust the voltage to the normal range 3.Seek for technical support

No.	Fault ID	Failure type	Possible causes	Solutions
			abnormal. 6.The control panel is abnormal	
10	Err.10	Inverter overload	1.The type selection of inverter is small 2.Whether the load is too large or the motor stall occurs	1.Choose the inverter with large power level 2.Reduce the load and check the motor and its mechanical conditions
11	Err.11	Motor Overload	1.Power grid voltage is too low 2.Whether the setting motor protection parameters (F8.03) is appropriate or not 3.Whether the load is too large or the motor stall occurs	1.Check the power grid voltage 2.Correctly set this parameter. 3.Reduce the load and check the motor and its mechanical conditions
12	Err.12	Input phase loss	1.The drive panel is abnormal. 2.The lightning protection plate is abnormal 3.The main control panel is abnormal 4.The three-phase input power is not normal	1.Replace the drive, the power board or contactor 2.Seek for technical support 3.Check and eliminate the existing problems in the peripheral line
13	Err.13	Output phase loss	1.The lead wires from the inverter to the motor is not normal 2.The inverter's three phase output is unbalanced when the motor is running 3.The drive panel is abnormal. 4.The module is abnormal	1.Eliminate peripheral faults 2.Check the motor's three-phase winding is normal or not and eliminate faults 3.Seek for technical support
14	Err.14	Module overheating	1.The air duct is blocked 2.The fan is damaged 3.The ambient temperature is too high 4.The module thermistor is damaged 5.The inverter module is damaged	1.Clean up the air duct 2.Replace the fan 3.Decrease the ambient temperature 4.Replace the thermistor 5.Replace the inverter module
15	Err.15	External equipment fault	Input external fault signal through the multi-function terminal DI	Reset run
16	Err.16	Communicatio n fault	1.The communication cable is not normal 2.The settings for communication expansion card F9.07 are incorrect 3.The settings for communication parameters F9 group are incorrect 4.The host computer is not	1.Check the communication cable 2.Correctly set the communications expansion card type 3.Correctly set the communication parameters 4.Check the wiring of host computer

No.	Fault ID	Failure type	Possible causes	Solutions
			working properly	
17	Err.17	Contactor fault	1.Input phase loss 2.The drive plate and the contact are not normal	1.Check and eliminate the existing problems in the peripheral line 2.Replace the drive, the power board or contactor
18	Err.18	Current detection fault	1.Check Hall device 2.The drive panel is abnormal.	1.Replace the drive panel 2.Replace hall device
19	Err.19	Motor parameter auto tuning fault	1.The motor parameters was not set according to the nameplate 2.The identification process of parameter is timeout	1.Correctly set motor parameter according to the nameplate 2.Check the lead wire from the inverter to the motor
20	Err.20	Disk code fault	1.The encoder is damaged 2.PG card is abnormal 3.The encoder model does not match 4.The encoder connection has error	1.Replace the encoder 2.Replace the PG card 3.Correctly set the encoder model according to the Actual conditions 4.Eliminate the line fault
21	Err.21	EEPROM read and write fault	EEPROM chip is damaged	Replace the main control panel
22	Err.22	Inverter hardware fault	1.overvoltage 2.overcurrent	1.Eliminate overvoltage fault 2.Eliminate overcurrent fault
23	Err.23	Short-circuit to ground fault	Motor short to ground	Replace the cable or motor
26	Err.26	Cumulative running time arrival fault	Cumulative running time arrival fault	Clear history information by using initialization function parameters
27	Err.27	Custom fault 1	Input custom fault 1 signal through the multi-function terminal DI	Reset run
28	Err.28	Custom fault 2	Input custom fault 2 signal through the multi-function terminal DI	Reset run
29	Err.29	Total power-on time arrival fault	Total power-on time reaches the set value	Clear history information by using initialization function parameters
30	Err.30	Load drop fault	The inverter running current is less than F8.31	Confirm whether the load is removed or not or the settings for parameter(F8.31, F8.32) accord with the Actual operating conditions
31	Err.31	PID feedback loss when running fault	PID feedback is less than the set value of E2.11	Check PID feedback signal or set E2.11 to an appropriate value
40	Err.40	Quick current limiting fault	1.Whether the load is too large or the motor stall occurs 2.The type selection of inverter is small	1.Reduce the load and check the motor and its mechanical conditions 2.Choose the inverter with large power level
41	Err.41	Switch motor	Change current motor	Switch motor after the inverter

No.	Fault ID	Failure type	Possible causes	Solutions
		when running fault	through the terminal when the inverter is running	stops
42	Err.42	Too large speed deviation fault	1.The setting for Too Large Speed Deviation parameters(F8.15, F8.16) is unreasonable. 2.The setting for encoder parameters is incorrect 3.The parameter was not identified	1.Reasonably set the detection parameters 2.Correctly set encoder parameters 3.Perform identification for the motor parameters
43	Err.43	Motor over speed fault	1.The parameter was not identified 2.The setting for encoder parameters is incorrect 3.The setting for motor overspeed detection parameter(F8.13, F8.14) is unreasonable.	1.Perform identification for the motor parameters 2.Correctly set encoder parameters 3.Reasonably set the detection parameters
45	Err.45	Motor overtemperature fault	1.The wiring of temperature sensor is loose 2.The motor temperature is too high	1.Detect the wiring of temperature sensor wiring and eliminate fault. 2.Decrease carrier frequency or take other cooling measures to cool motor
51	Err.51	Initial position error	the deviation between the motor parameters and the actual parameters is too large	reconfirm the correct motor parameters, focus on whether the rated current is set to too small.
64	Arr.64	Back electromotive force identification warning	1. Motor parameter setting error 2.b0.14 back electromotive force setting error 3. Rotation self-learning back electromotive force identification abnormality warning 4. Demagnetization occurs in the motor 5. Back electromotive force of the motor is indeed too large or too small.	1. Correctly set the motor parameters, especially the rated frequency and rated speed 2. Check whether the b014 setting is too large or too small 3. Check whether the motor is completely unloaded during rotation self-learning; 4. Check whether the motor is demagnetized 5. If it is confirmed that the back electromotive force of the motor is too large or too small, press the stop key on the keyboard to reset the warning and then run directly.
-	COF	Communication failure	1.Keyboard interface control board interface; 2.Keyboard or crystal connector; 3.Control board or keyboard hardware damage; 4.Keyboard line is too long, causing the interference.	1. Detection of keyboard interface, control board interface is abnorma. 2.Detect keyboard, crystal joints are abnormal. 3.Replace control board or keyboard. 4. Consult factory, seek help.

6-2.EMC (Electromagnetic Compatibility)

6-2-1.Definition

Electromagnetic compatibility refers to the ability that the electric equipment runs in an electromagnetic interference environment and implements its function stably without interferences on the electromagnetic environment.

6-2-2.EMC standard

In accordance with the requirements of the Chinese national standard GB/T12668.3, the inverter must comply with the requirements of electromagnetic interference and anti- electromagnetic interference.

Our existing products adopt the latest international standards: IEC/EN61800-3: 2004 (Adjustable speed electrical Power drive systems Part 3: EMC requirements and specific test methods), which is equivalent to the Chinese national standards GB/T12668.3. EC/EN61800-3 assesses the inverter in terms of electromagnetic interference and anti-electronic interference. Electromagnetic interference mainly tests the radiation interference, conduction interference and harmonics interference on the inverter (Necessary for civil inverter).

Anti-electromagnetic interference mainly tests the conduction immunity, radiation immunity, surge immunity, EFTB(Electrical Fast Transient Burs) immunity, ESD immunity and power low frequency end immunity (the specific test items includes: 1. Immunity tests of input voltage sag, interrupt and change; 2.Commutation notch immunity; 3. harmonic input immunity ; 4. input frequency change; 5. input voltage unbalance; 6. input voltage fluctuation). The tests shall be conducted strictly in accordance with the above requirements of IEC/EN61800-3, and our products are installed and used according to the guideline of the Section 7.3 and can provide good electromagnetic compatibility in general industry environment.

6-3.EMC directive

6-3-1.Harmonic effect

The higher harmonics of power supply may damage the inverter. Thus, at some places where the quality of power system is relatively poor, it is recommended to install AC input reactor.

6-3-2.Electromagnetic interference and installation precautions

There are two kinds of electromagnetic interference, one is the interference from electromagnetic noise in the surrounding environment to the inverter, and the other is the interference from the inverter to the surrounding equipment.

Installation Precautions:

1)The earth wires of the Inverter and other electric products ca shall be well grounded;

2)The power cables of the inverter power input and output and the cable of weak current signal (e.g. control line) shall not be arranged in parallel but in vertical if possible.

3) It is recommended that the output power cables of the inverter shall use shield cables or steel pipe shielded cables and that the shielding layer shall be grounded reliably, the lead cables of the equipment suffering interferences shall use twisted-pair shielded control cables, and the shielding layer shall be grounded reliably.

4)When the length of motor cable is longer than 30 meters, it needs to install output filter or reactor.

6-3-3.Remedies for the interference from the surrounding electromagnetic equipment to the inverter

Generally the electromagnetic interference on the inverter is generated by plenty of relays, contactors and electromagnetic brakes installed near the inverter. When the inverter has error action due to the interference, the following measures is recommended:

1) Install surge suppressor on the devices generating interference;

2) Install filter at the input end of the inverter, please refer to Section 6.3.6 for the specific operations.

3) The lead cables of the control signal cable of the inverter and the detection line shall use the shielded cable and the shielding layer shall be grounded reliably.

6-3-4.Remedies for the interference from the inverter to the surrounding electromagnetic equipment

These noise interference are classified into two types: One is the radiation interference of the inverter, and the other is the conduction interference of the inverter. These two types of interference cause that the surrounding electric equipment suffer from the affect of electromagnetic or electrostatic induction. Further, the surrounding equipment produces error action. For different interference, please refer to the following remedies:

1) Generally the meters, receivers and sensors for measuring and testing have more weak signals. If they are placed nearby the inverter or together with the inverter in the same control cabinet, they easily suffer from interference and thus generate error actions. It is recommended to handle with the following methods: Away from the interference source as far as possible; do not arrange the signal cables with the power cables in parallel and never bind them together; both the signal cables and power cables shall use shielded cables and shall be well grounded; install ferrite magnetic ring (with suppressing frequency of 30 to 1, 000MHz) at the output side of the inverter and wind it 2 to 3 turns; install EMC output filter in more severe conditions.

2) When the interfered equipment and the inverter use the same power supply, it may cause conduction interference. If the above methods cannot remove the interference, it shall install EMC filter between the inverter and the power supply (refer to Section 6.3.6 for the selection operation);

3) The surrounding equipment shall be separately grounded, which can avoid the interference caused by the leakage current of the inverter's grounding wire when common grounding mode is adopted.

6-3-5.Remedies for leakage current

There are two forms of leakage current when using the inverter. One is leakage current to the earth, and the other is leakage current between the cables.

1) Factors of affecting leakage current to the earth and its solutions:

There are the distributed capacitance between the lead cables and the earth. The larger the distributed capacitance, the larger the leakage current; the distributed capacitance can be reduced by effectively reducing the distance

Between the inverter and the motor. The higher the carrier frequency, the larger the leakage current. The leakage current can be reduced by reducing the carrier frequency. However, the carrier frequency reduced may result in

The increase of motor noise.Please note that additional installation of reactor is also an effective method to solve leakage current problem.

The leakage current may increase with the increase of circuit current. Therefore, when the motor power is higher, the corresponding leakage current will be higher too.

2) Factors of producing leakage current between the cables and its solutions:

There is the distributed capacitance between the output cables of the inverter. If the current passing lines has higher harmonic, it may cause resonance and thus result in leakage current. If the thermal relay is used, it may generate error action.

The solution is to reduce the carrier frequency or install output reactor. It is recommended that the thermal relay shall not be installed in the front of the motor when using the inverter, and that electronic over current protection function of the inverter shall be used instead.

6-3-6.Precautions on installing EMC input filter at the input end of power supply

1) Note: when using the inverter, please follow its rated values strictly. Since the filter belongs to Classification I electric appliances, the metal enclosure of the filter and the metal ground of the installing cabinet shall be well earthed in a large area, and have good conduction continuity, otherwise there may be danger of electric shock and the EMC effect may be greatly affected. Through the EMC test, it is found that the filter ground end and the PE end of the inverter must be connected to the same public earth end, otherwise the EMC effect may be greatly affected.

2) The filter shall be installed at a place close to the input end of the power supply as much as possible.

Chapter 7 Dimension

7-1.Dimension

7-1-1.Product outside drawing, installation size

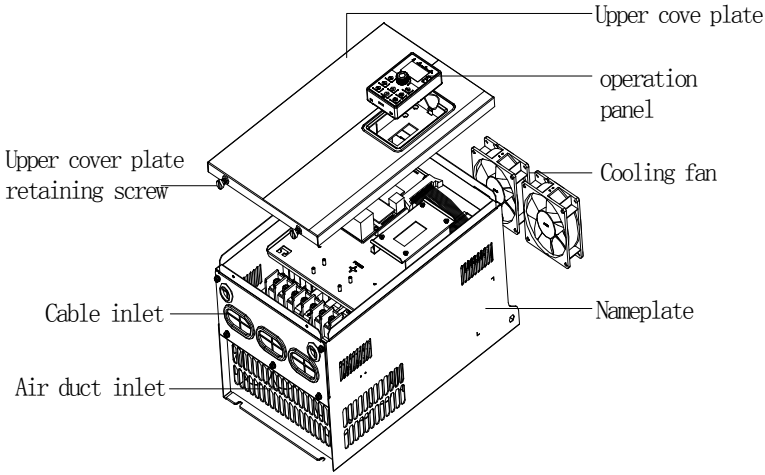

Figure 7-1:Outline drawing and installation hole size of 15kw G3 and above products

7-1-2.Product outline dimension and installation dimension

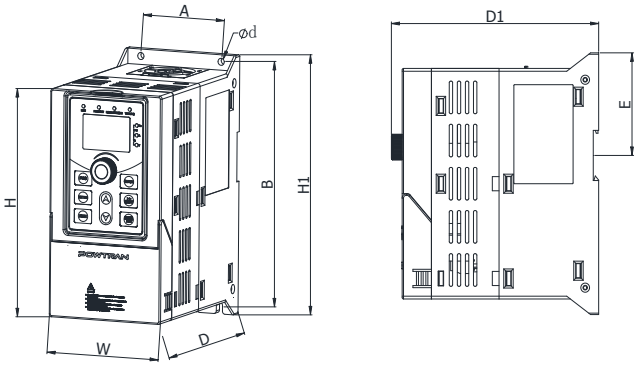

Note: 0.75-4kw G3 support guide rail installation

Figure 7-2:0.75-4 kW G3 outline dimension（Frame No.：A1～A2）

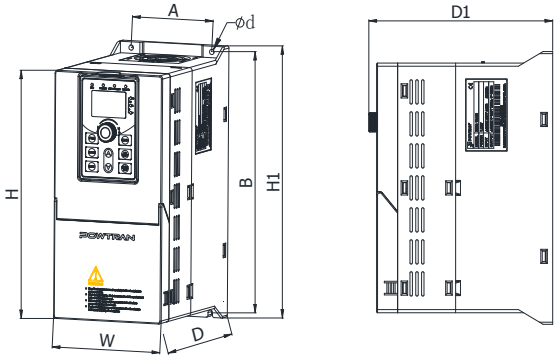

Figure 7-3: 5.5-11kW G3 outline dimension（Frame No.：A1～A2）

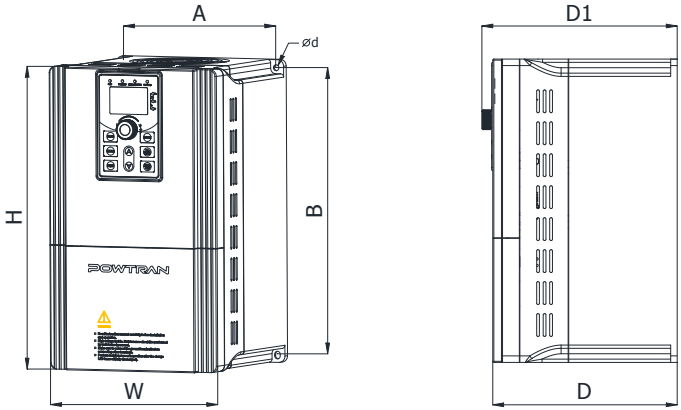

Figure 7-4:15～22kW G3 outline dimension（Frame No.：A3）

Single phase AC220V series outline dimension drawing and installation dimension

Model	Output power (kW)	Dimension（mm）					Installation（mm）			Guide rail installation position	Weight（kg）	Frame No.
		H	H1	W	D	D1	A	B	d	E		
PI550-E 0R7G1	0.75	163	185	90	146	154	65	174	5	72.5	1.6	A1
PI550-E 1R5G1	1.5	163	185	90	166	174	65	174	5	72.5	1.8	A2
PI550-E 2R2G1	2.2											
PI550-E 004G1	4	238	260	120	182	190	90	250	5	/	2.7	A3
PI550-E 5R5G1	5.5	290	/	170	193	201	155	276	5	/	5.8	A4

Three AC220V series outline dimension drawing and installation dimension

Model	Output power (kW)	Dimension（mm）					Installation（mm）			Guide rail installation position	Weight（kg）	Frame No.
		H	H1	W	D	D1	A	B	d	E		
PI550-E 0R4G2	0.4	163	185	90	146	154	65	174	5	72.5	1.6	A1
PI550-E 0R7G2	0.75											
PI550-E 1R5G2	1.5											
PI550-E 2R2G2	2.2	163	185	90	166	174	65	174	5	72.5	1.8	A2
PI550-E 004G2	4	238	260	120	182	190	90	250	5	/	2.7	A3
PI550-E 5R5G2	5.5											
PI550-E 7R5G2	7.5	290	/	170	193	201	155	276	5	/	5.8	A4
PI550-E 011G2	11											

Three AC380V series outline dimension drawing and installation dimension

Model	Output power (kW)	Dimension（mm）					Installation (mm)			Guide rail installation position	Weight（kg）	Frame No.
		H	H1	W	D	D1	A	B	d	E		
PI550-E 0R7G3	0.75	163	185	90	146	154	65	174	5	72.5	1.6	A1
PI550-E 1R5G3	1.5											
PI550-E 2R2G3	2.2											
PI550-E 004G3	4	163	185	90	166	174	65	174	5	72.5	1.8	A2
PI550-E 5R5G3	5.5	238	260	120	182	190	90	250	5	/	2.7	A3
PI550-E 7R5G3	7.5											
PI550-E 011G3	11											
PI550-E 015G3	15											
PI550-E 018G3	18.5											
PI550-E 022G3	22											

Three AC480V series outline dimension drawing and installation dimension

Model	Output power (kW)	Dimension（mm）					Installation (mm)			Guide rail installation position	Weight（kg）	Frame No.
		H	H1	W	D	D1	A	B	d	E		
PI550-E 0R7G4	0.75	163	185	90	146	154	65	174	5	72.5	1.6	A1
PI550-E 1R5G4	1.5											
PI550-E 2R2G4	2.2											
PI550-E 004G4	4	163	185	90	166	174	65	174	5	72.5	1.8	A2
PI550-E 5R5G4	5.5	238	260	120	182	190	90	250	5	/	2.7	A3
PI550-E 7R5G4	7.5											
PI550-E 011G4	11											
PI550-E 015G4	15											
PI550-E 018G4	18.5											
PI550-E 022G4	22											

Iron shell wall hanging series:

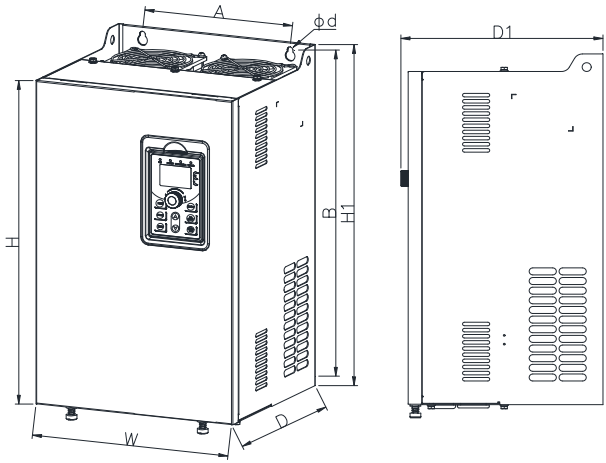

Figure 7-5:30～220kW G3 Dimension（Frame No.：A5～A11，A19）

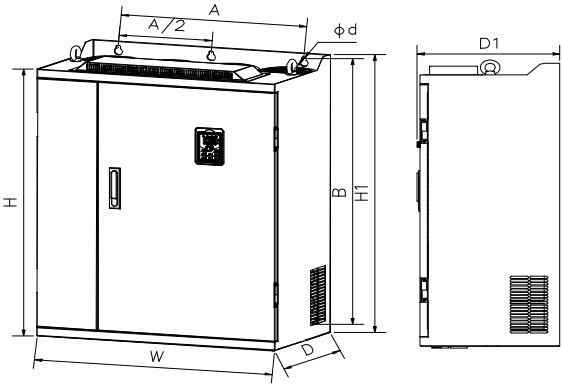

Figure 7-6:250～450kW G3 Dimension（Frame No.：A12～A13）

Outline dimension drawing and installation dimension of three phase 220VAC

Model	Output power (kW)	Dimension (mm)					Installation (mm)			Weight (kg)	Frame No.
		H	H1	W	D	D1	A	B	d		
PI550-E 015G2	15	330	350	210	190	198	150	335	6	9.5	A5
PI550-E 018G2	18.5	380	400	240	215	223	180	385	7	13	A6
PI550-E 022G2	22	380	400	280	215	223	180	385	7	14	A7
PI550-E 030G2	30										
PI550-E 037G2	37	500	520	300	275	283	220	500	10	42	A8
PI550-E 045G2	45	550	575	355	320	328	250	555	10	58	A9
PI550-E 055G2	55										
PI550-E 075G2	75	695	720	400	360	368	300	700	10	73	A10
PI550-E 093G2	93	790	820	480	390	398	370	800	11	108	A11
PI550-E 110G2	110										
PI550-E 132G2	132	940	980	560	410	418	415	945	13	153	A12
PI550-E 160G2	160										

Three phase 380VAC outline dimension drawing and installation dimension

Model	Output power (kW)	Dimension (mm)					Installation (mm)			Weight (kg)	Frame No.
		H	H1	W	D	D1	A	B	d		
PI550-E 030G3	30	330	350	210	190	198	150	335	6	9.5	A5
PI550-E 037G3	37	380	400	240	215	223	180	385	7	13	A6
PI550-E 045G3	45										
PI550-E 055G3	55	380	400	280	215	223	180	385	7	14	A7
PI550-E 075G3	75	500	520	300	275	283	220	500	10	42	A8

Model	Output power (kW)	Dimension (mm)					Installation (mm)			Weight (kg)	Frame No.
		H	H1	W	D	D1	A	B	d		
PI550-E 093G3	93	550	575	355	320	328	250	555	10	58	A9
PI550-E 110G3	110										
PI550-E 132G3	132										
PI550-E 160G3	160	695	720	400	360	368	300	700	10	73	A10
PI550-E 200G3	200	790	820	480	390	398	370	800	11	108	A11
PI550-E 220G3	220										
PI550-E 250G3	250	940	980	560	410	418	415	945	13	153	A12
PI550-E 280G3	280										
PI550-E 315G3	315	940	980	705	410	418	550	945	13	190	A13
PI550-E 355G3	355										
PI550-E 400G3	400										
PI550-E 450G3	450										

Three phase 480VAC outline dimension drawing and installation dimension

Model	Output power (kW)	Dimension（mm）					Installation (mm)			Guide rail installation position	Weight（kg）
		H	H1	W	D	D1	A	B	d		
PI550-E 030G4	30	330	350	210	190	198	150	335	6	9.5	A5
PI550-E 037G4	37	380	400	240	215	223	180	385	7	13	A6
PI550-E 045G4	45										
PI550-E 055G4	55	380	400	280	215	223	180	385	7	14	A7
PI550-E 075G4	75	500	520	300	275	283	220	500	10	42	A8
PI550-E 093G4	93	550	575	355	320	328	250	555	10	58	A9
PI550-E 110G4	110										
PI550-E 132G4	132										
PI550-E 160G4	160	695	720	400	360	368	300	700	10	73	A10
PI550-E 200G4	200	790	820	480	390	398	370	800	11	108	A11
PI550-E 220G4	220										
PI550-E 250G4	250	940	980	560	410	418	415	945	13	153	A12
PI550-E 280G4	280										
PI550-E 315G4	315	940	980	705	410	418	550	945	13	190	A13
PI550-E 355G4	355										
PI550-E 400G4	400										
PI550-E 450G4	450										

Three phase 690VAC outline dimension drawing and installation dimension

Model	Output power (kW)	Dimension（mm）					Installation (mm)			Guide rail installation position	Weight（kg）
		H	H1	W	D	D1	A	B	d		
PI550-E 055G6	55	380	400	280	215	223	180	385	7	14	A7
PI550-E 075G6	75	500	520	300	275	283	220	500	10	42	A8
PI550-E 093G6	93	550	575	355	320	328	250	555	10	58	A9
PI550-E 110G6	110										
PI550-E 132G6	132										
PI550-E 160G6	160	695	720	400	360	368	300	700	10	73	A10
PI550-E 200G6	200	790	820	480	390	398	370	800	11	108	A11
PI550-E 220G6	220										
PI550-E 250G6	250	940	980	560	410	418	415	945	13	153	A12
PI550-E 280G6	280										
PI550-E 315G6	315	940	980	705	410	418	550	945	13	190	A13
PI550-E 355G6	355										
PI550-E 400G6	400										

PI550-E Iron shell floor stand series(With DC reactor base)

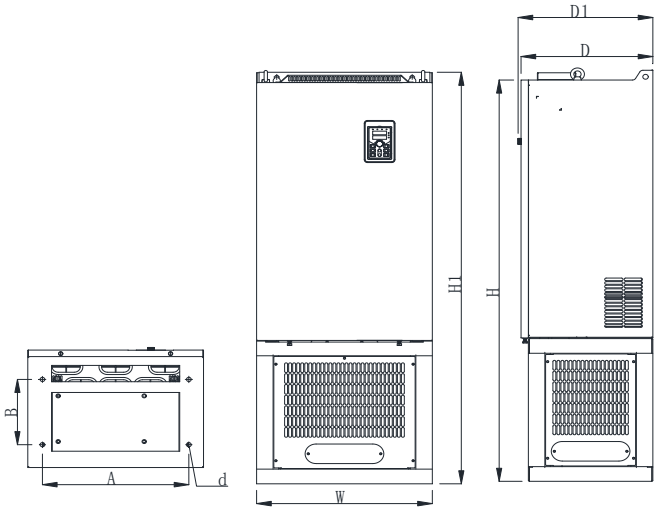

Figure 7-7:132～220kW G3R （Frame No.：A13.1，A14～A15）

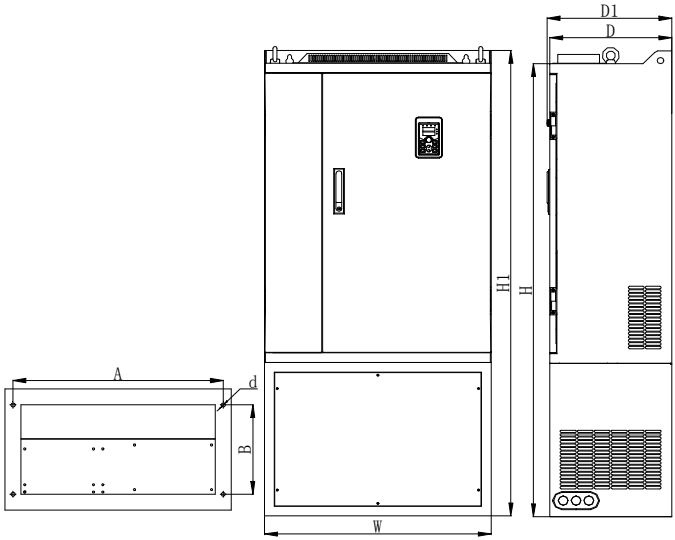

Figure 7-8: 250～450kW G3R （Frame No.：A16～A17）

Outline dimension drawing and installation dimension of three phase 380VAC

Model	Output power (kW)	Dimension (mm)					Installation (mm)			Weight (kg)	Frame No.
		H	H1	W	D	D1	A	B	d		
PI550-E 132G3R	132	799	824	355	320	328	310	250	9*15	89	A13.1
PI550-E 160G3R	160	995	1020	400	360	368	350	270	13*18	115	A14
PI550-E 200G3R	200	1110	1140	480	390	398	430	330	13*23	153	A15
PI550-E 220G3R	220										
PI550-E 250G3R	250	1419	1460	560	410	418	500	310	13	205	A16
PI550-E 280G3R	280										
PI550-E 315G3R	315	1270	1310	705	410	418	645	310	13	249.4	A17
PI550-E 355G3R	355										
PI550-E 400G3R	400										
PI550-E 450G3R	450										

Note: With the letter "R" means with a DC reactor; product installation rings screw height dimensions: H1 + 15mm.

7-1-3.Keypad dimension drawing

PI550-E Keyboard dimension:

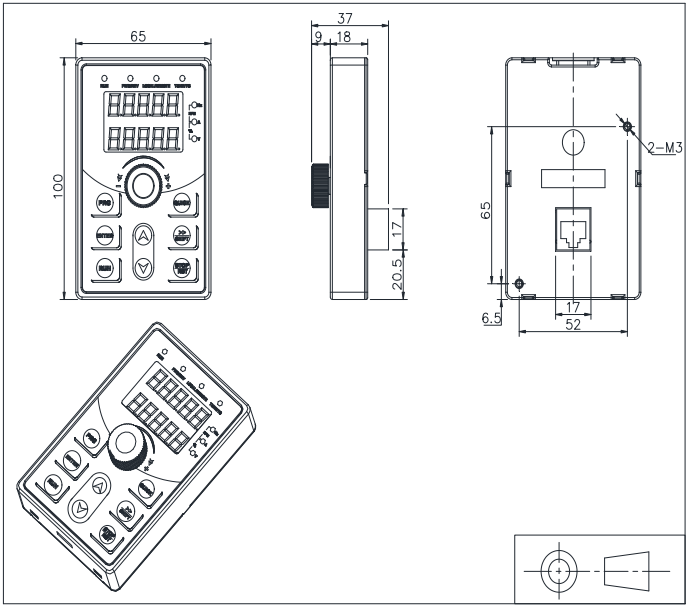

Figure 7-9:PI550-E Keyboard dimension (mm)

PI550-E Keyboard frame dimension

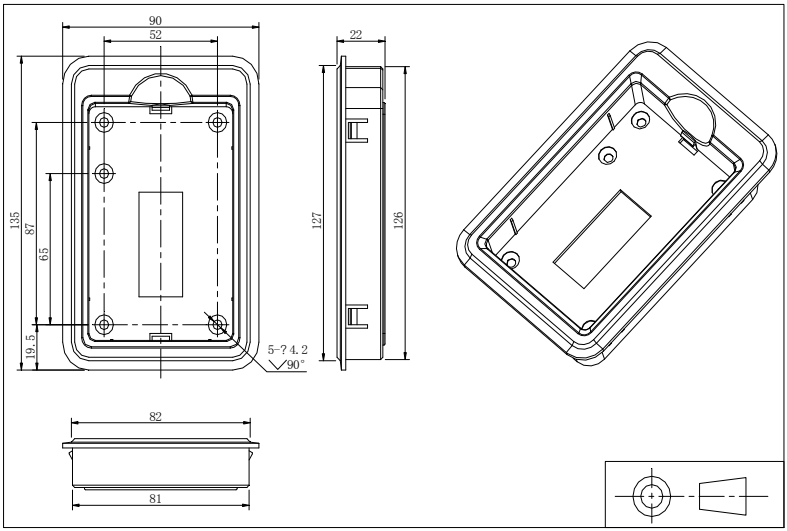

Figure 7-10: PI550-E Keyboard dimension (mm)

PI550-E Keyboard installation open inlet dimension

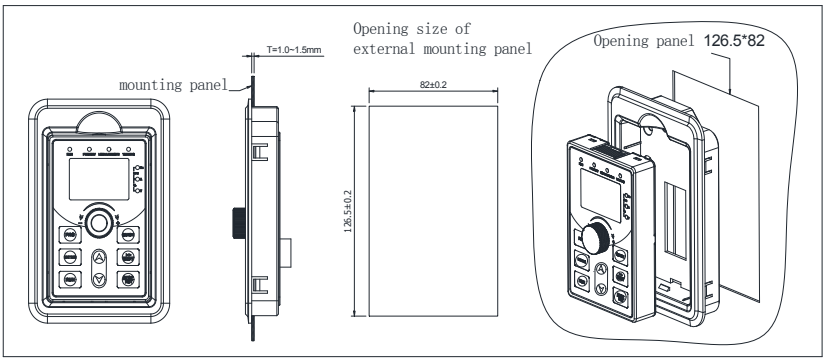

Figure 7-11:PI550-E keyboard installation open inlet dimension(mm)

Chapter 8 Maintenance and repair

8-1.Inspection and maintenance

During normal use of the inverter, in addition to routine inspections, the regular inspections are required (e.g. the overhaul or the specified interval, and the interval shall not exceed 6 months), please refer to the following table to implement the preventive measures.

Check Date		Check Points	Check Items	Check to be done	Method	Criterion
Routine	Regular					
√		Display	LED display	Whether display is abnormal or not	Visually check	As per use status
√	√	Cooling system	Fan	Whether abnormal noise or vibration exists or not	Visually and audibly check	No abnormal
√		Body	Surrounding conditions	Temperature, humidity, dust, harmful gas.	Visually check with smelling and feeling	As per Section 2-1
√		Input/output terminals	Voltage	Whether input/output voltage is abnormal or not	Test R, S, T and U, V, W terminals	As per standard specifications
	√	Main circuit	Overall	Whether these phenomenon of loose fastenings, overheat, discharging, much dust, or blocked air duct exist or not	Visually check, tighten and clean	No abnormal
			Electrolytic capacitance	Whether appearance is abnormal or not	Visually check	No abnormal
			Wires and conducting bar	Whether they are loose or not	Visually check	No abnormal
			Terminals	If screws or bolts are loose or not	Tighten	No abnormal

"√" means routine or regular check to be needed

Do not disassemble or shake the device gratuitously during check, and never unplug the connectors, otherwise the system will not run or will enter into fault state and lead to component failure or even damage to the main switching device such as IGBT module.

The different instruments may come to different measurement results when measuring. It is recommended that the pointer voltmeter shall be used for measuring input voltage, the rectifier voltmeter for output voltage, the clamp-on ammeter for input current and output current, and the electric wattmeter for power.

8-2.Parts for regular replacement

To ensure the reliable operation of inverter, in addition to regular care and maintenance, some internal mechanical wear parts(including cooling fan, filtering capacitor of main circuit for energy storage and exchange, and printed circuit board) shall be regularly replaced. Use and replacement for such parts shall follow the provisions of below table, also depend on the specific application environment, load and current status of inverter.

Name of Parts	Standard life time
Cooling fan	1 to 3 years
Filter capacitor	4 to 5 years
Printed circuit board(PCB)	5 to 8 years

8-3.Storage

The following actions must be taken if the inverter is not put into use immediately(temporary or long-term storage) after purchasing:

※ It should be store at a well-ventilated site without damp, dust or metal dust, and the ambient temperature complies with the range stipulated by standard specification

※ Voltage withstand test can not be arbitrarily implemented, it will reduce the life of inverter. Insulation test can be made with the 500-volt megger before using, the insulation resistance shall not be less than 4MΩ.

8-4.Capacitor rebuilt

If the frequency inverter hasn't been used for a long time, before using it please rebuilt the DC bus capacitor according the instruction. The storage time is counted from delivery.

Time	Operation instruction
Less than 1 year	No need to recharge
Between 1~2 years	Before the first time to use, the frequency inverter must be recharged for one hour
Between 2~3years	Use adjustable power to charge the frequency inverter: --25% rated power 30 minutes, -- 50% rated power 30minutes, -- 75% rated power 30minutes, --Last 100% rated power 30minutes,
More than 3 years	Use adjustable power to charge the frequency inverter: --25% rated power 2hours, --50% rated power 2 hours, -- 75% rated power 2hours, -- Last 100% rated power 2hours.

Instruction of using adjustable power to charge the frequency inverter:

The adjustable power is decided by the frequency inverter input power, for the single phase/3 phase 220v frequency inverter, we uase 220v AC/2A Regulator. Both single phase and three phase frequency inverter can be charged by single phase Power Surge(L+ connect R,N connects T) Because it is the same rectifier,so al l the DC bus capacitor will be charged at the same time.

You should make sure the voltage(380v) of high voltage frequency inverter, because when the capacitor being charged it almost doesn't need any current, so small capacitor is enough(2A)

The instruction of using resisitor(incandescent lights) to charge frequency inverters:

When charge the DC bus capacitor of drive system by connecting power directly, then the time should not be less than 60 minutes. The operation should be carried on under the condition of normal temperature and without load, and moreover ,should be added resistor in the power supply cycle.

380V drive system: Use 1K/100W resistor. When the power is less than 380v, 100w incandescent lights is also suitable. When using incandescent lights, the lights will extinct or become very weak.

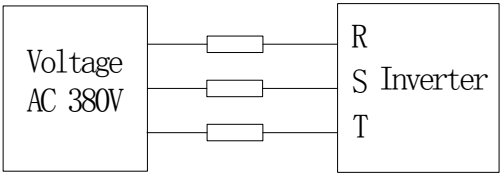

Figure 8-1:380V Drive equipment charging circuit example

8-5.Measuring and readings

※ If a general instrument is used to measure current, imbalance will exists for the current at the input terminal. generally, the deviation is not more than 10%, that is normal. If the deviation exceeds 30%, please inform the original manufacturer to replace rectifier bridge, or check if the deviation of three-phase input voltage is above 5V or not.

※ If a general multi-meter is used to measure three-phase output voltage, the reading is not accurate due to the interference of carrier frequency and it is only for reference.

Chapter 9 Options

User can additionally install peripheral devices based on the different application conditions and requirements for this series of product, and its wiring diagram is as follows:

The figure shows the external wiring diagram of the PI550-E frequency inverter.

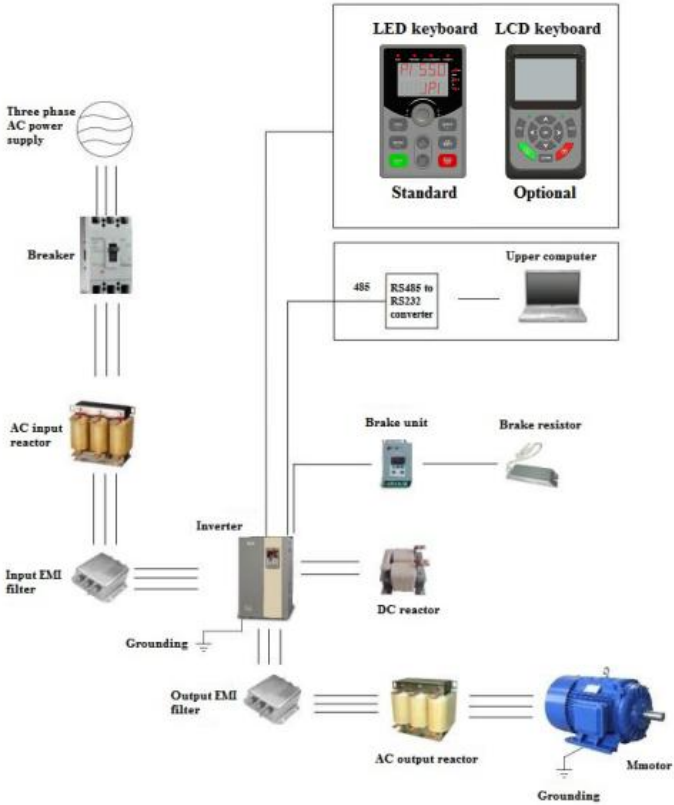

Figure 9-1:Peripheral wiring diagram

Note:

1. PI550-E series standard with LED keyboard, optional LCD keyboard;
2. PI550-E 030G3 and lower power built-in braking unit
3. The braking unit adopts our standard PB200 brake unit, more details please refer to the PB200 manual

9-1.Expansion cards

If the extended function (PG card, Canbus card etc.)for other functional modules is needed, please specify the functional module card you want when ordering.

9-2.AC input reactor

AC input reactor can inhibit high harmonics of the inverter input current, significantly improving power factor of the inverter. It is recommended that AC input reactor should be used in the following cases.

※ The ratio of the capability of power supply used for the inverter to the inverter own capability is more than 10:1.

※ The thyristor load or the device of power-factor compensation with ON/OFF is connected with the same power supply.

※ The degree of unbalance for three-phase power supply voltage is larger (≥ 3%).

※ Dimensions for common specifications of AC input reactor are as follows:

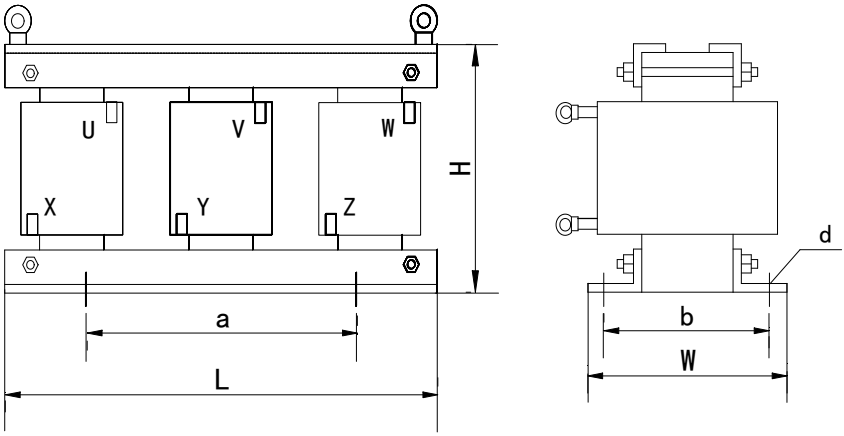

Figure 9-2:AC input reactor dimension

9-2-1. AC Input Reactor

Item No.	Model	Power rating (kW)	Rated current (A)	N.W. (kg)	Voltage reduction (V)	Inductance (mH)	Installation dimension a/b/d(mm)
380V voltage series							
1	ACL-0005-EISC-E3M8B	1.5	5	2.48	2.00%	2.8	91/65/6*11
2	ACL-0007-EISC-E2M5B	2.2	7	2.58	2.00%	2.0	91/65/6*11
3	ACL-0010-EISC-E1M5B	4.0	10	2.67	2.00%	1.4	91/65/6*11
4	ACL-0015-EISH-E1M0B	5.5	15	3.45	2.00%	0.93	95/61/6*15
5	ACL-0020-EISH-EM75B	7.5	20	3.25	2.00%	0.7	95/61/6*15
6	ACL-0030-EISCL-EM47	11	30	5.13	2.00%	0.47	120/72/8.5*20
7	ACL-0040-EISCL-EM35	15	40	5.20	2.00%	0.35	120/72/8.5*20
8	ACL-0050-EISCL-EM28	18.5	50	6.91	2.00%	0.28	120/72/8.5*20
9	ACL-0060-EISCL-EM24	22	60	7.28	2.00%	0.24	120/72/8.5*20
10	ACL-0090-EISCL-EM16	37	90	7.55	2.00%	0.16	120/72/8.5*20
11	ACL-0120-EISCL-EM12	45	120	10.44	2.00%	0.12	120/92/8.5*20

12	ACL-0150-EISH-EM11B	55	150	14.8	2.00%	0.095	182/76/11*18
14	ACL-0200-EISH-E80UB	75	200	19.2	2.00%	0.07	182/96/11*18
15	ACL-0250-EISH-E65UB	110	250	22.1	2.00%	0.056	182/96/11*18
16	ACL-0290-EISH-E50UB	132	290	28.3	2.00%	0.048	214/100/11*18
17	ACL-0330-EISH-E50UB	160	330	28.3	2.00%	0.042	214/100/11*18
18	ACL-0390-EISH-E44UB	185	390	31.8	2.00%	0.036	243/112/12*20
19	ACL-0490-EISH-E35UB	220	490	43.6	2.00%	0.028	243/122/12*20
20	ACL-0530-EISH-E35UB	240	530	43.6	2.00%	0.026	243/122/12*20
21	ACL-0600-EISH-E25UB	280	600	52	2.00%	0.023	243/137/12*20
22	ACL-0660-EISH-E25UB	300	660	52	2.00%	0.021	243/137/12*20
23	ACL-0800-EISH-E25UB	380	800	68.5	2.00%	0.0175	260/175/12*20
24	ACL-1000-EISH-E14UB	450	1000	68.5	2.00%	0.014	260/175/12*20

9-3.AC output reactor

Whether to configure AC output reactor on the output side of the frequency inverter can be determined according to the specific situation. The transmission line between the converter and the motor should not be too long, the cable is too long, and the larger the distribution capacitance, it is easy to produce the higher harmonic current.

When the connection wire from the inverter to the motor is longer, according to following form, it is used to inhibit over-current caused due to the distributed capacitance. Meanwhile, it can also inhibit the radio interference of the inverter.

Frequency Inverter Power（kW）	Rate Voltage（V）	The minimum length of cable length when selecting the output reactor.（m）
4	200～500	50
5.5	200～500	70
7.5	200～500	100
11	200～500	110
15	200～500	125
18.5	200～500	135
22	200～500	150
≥30	280～690	150

9-3-1.AC output reactor

Item No.	Model	Power rating (kW)	Rated current (A)	N.W. (kg)	Voltage reduction (V)	Inductance (mH)	Installation dimension a/b/d(mm)
380V voltage series							
1	OCL-0005-EISC-E1M4	1.5	5	3.48	1.00%	1.4	91/65/6*11
2	OCL-0007-EISC-E1M0	2.2	7	2.54	1.00%	1	91/65/6*11
3	OCL-0010-ELSC-EM70	4.0	10	2.67	1.00%	0.7	91/65/6*11
4	OCL-0015-ELSC-EM47	5.5	15	3.45	1.00%	0.47	95/61/6*15
5	OCL-0020-ELSC-EM35	7.5	20	3.25	1.00%	0.35	95/616*15
6	OCL-0030-ELSC-EM23	11	30	5.5	1.00%	0.23	95/818.5*20
7	OCL-0040-ELSC-EM18	15	40	5.5	1.00%	0.18	95/81/8.5*20
8	OCL-0050-ELSC-EM14	18.5	50	5.6	1.00%	0.14	95/81/8.5*20
9	OCL-0060-ELSC-EM12	22	60	5.8	1.00%	0.12	120/72/8.5*20
10	OCL-0080-ELSC-E87U	30	80	6.0	1.00%	0.087	120/72/8.5*20
11	OCL-0090-ELSC-E78U	37	90	6.0	1.00%	0.078	120/72/8.5*20
12	OCL-0120-ELSC-FbU	45	120	9.6	1.00%	0.058	120/92/8.5*20
13	OCL-0150-EISH-E47U	55	150	15	1.00%	0.047	182/87/11*18
14	OCL-0200-EISH-E35U	75	200	17.3	1.00%	0.035	182/97/11*18
15	OCL-0250-EISH-E28U	110	250	17.8	1.00%	0.028	182/97/11*18
16	OCL-0290-EISH-E24U	132	290	24.7	1.00%	0.024	214/101/11*18
17	OCL-0330-EISH-E21U	160	330	26	1.00%	0.021	214/106/11*18
18	OCL-0390-EISH-E18U	185	390	26.5	1.00%	0.018	214/106/11*18
19	OCL-0490-EISH-E14U	220	490	36.6	1.00%	0.014	243/113/12*20
20	OCL-0530-EISH-E13U	240	530	36.6	1.00%	0.013	243/113/12*20
21	OCL-0600-EISH-E12U	280	600	43.5	1.00%	0.012	243/128/12*20
22	OCL-0660-EISH-E4F0	300	660	44	1.00%	0.011	243/128/12*20
23	OCL-0800-EISH-FbF0	380	800	60.8	1.00%	0.0087	260/175/12*20
24	OCL-1000-EISH-E4F0	450	1000	61.5	1.00%	0.007	260/175/12*20

9-4.DC reactor

Item No.	Model	Power rating (kW)	Rated current (A)	N.W. (kg)	Inductance (mH)	Installation dimension a/b/d(mm)
380V voltage series						
1	DCL-0003-EIDC-E28M	0.4	3	1.5	28	63/47/5.4*9
2	DCL-0003-EIDC-E28M	0.8	3	1.5	28	63/47/5.4*9
3	DCL-0006-EIDC-E11M	1.5	6	2.3	11	63/60/5.4*9
4	DCL-0006-EIDC-E11M	2.2	6	2.3	11	63/60/5.4*9
5	DCL-0012-EIDC-E6M3	4.0	12	3.2	6.3	80/70/6*11
6	DCL-0023-EIDH-E3M6	5.5	23	3.8	3.6	87/70/6*11
7	DCL-0023-EIDH-E3M6	7.5	23	3.8	3.6	87/70/6*11
8	DCL-0033-EIDH-E2M0	11	33	4.3	2	87/70/6*11
9	DCL-0033-EIDH-E2M0	15	33	4.3	2	87/70/6*11
10	DCL-0040-EIDH-E1M3	18.5	40	4.3	1.3	87/70/6*11
11	DCL-0050-EIDH-E1M1	22	50	5.5	1.08	95/85/8.4*13
12	DCL-0065-EIDH-EM80	30	65	7.2	0.8	111/85/8.4*13
13	DCL-0078-EIDH-EM70	37	78	7.5	0.7	111/85/8.4*13
14	DCL-0095-EIDH-EM54	45	95	7.8	0.54	111/85/8.4*13
15	DCL-0115-EIDH-EM45	55	115	9.2	0.45	125/90/9*18
16	DCL-0160-UIDH-EM36	75	160	10	0.36	100/98/9*18
17	DCL-0180-UIDH-EM33	93	180	20	0.33	100/98/9*18
18	DCL-0250-UIDH-EM26	110	250	23	0.26	176/115/11*18
19	DCL-0250-UIDH-EM26	132	250	23	0.26	176/115/11*18
20	DCL-0340-UIDH-EM17	160	340	23	0.17	176/115/11*18
21	DCL-0460-UIDH-EM09	185	460	28	0.09	191/115/11*18
22	DCL-0460-UIDH-EM09	220	460	28	0.09	191/115/11*18
23	DCL-0650-UIDH-E72U	300	650	33	0.072	206/125/11*18

9-5.Input filter

Item No.	Model	Voltage (V)	Power rating (kW)	Rated current (A)	N.W. (kg)	dimension L/W/H (mm)	Installation dimension a/b/d(mm)
1	YX82G2-5A-S	380	0.75~1.5	5	0.54	100/105/40	50/95/Φ4.5*6.5
2	YX82G2-10A-S	380	2.2~4	10	0.55	100/105/40	50/95/Φ4.5*6.5
3	YX82G5D-20A-S	380	5.5~7.5	16	1.6	185/105/60	167.8/85/Φ6.5*9.2
4	YX82G5D-36A-S	380	11~15	36	1.8	185/105/60	167.8/85/Φ6.5*9.2
5	YX82G5D-50A-S	380	18.5~22	45	1.6	185/105/60	167.8/85/Φ6.5*9.2
6	YX82G6D-65A-S	380	30	65	-	310/170/107	280/142.5/Φ8.5*14
7	YX82G6D-80A-S	380	37	80	6.3	310/170/107	280/142.5/Φ8.5*14
8	YX82G6D-100A-S	380	45	100	6.4	310/170/107	280/142.5/Φ8.5*14
9	YX82G6D-120A-S	380	55	120	7.4	310/170/107	280/142.5/Φ8.5*14
10	YX82G7D-150A-S	380	75	150	8.9	352/185/112	325/151/Φ8.5*14
11	YX82G7D-200A-S	380	93	200	-	352/185/112	325/151/Φ8.5*14
12	YX82G8-400A-B	380	200	300	12	380/220/155	228/195/Φ12

9-6.Output filter

Item No.	Model	Voltage (V)	Power rating (kW)	Rated current (A)	N.W. (kg)	dimension L/W/H(mm)	Installation dimension a/b/d(mm)
1	YX82G2-5A-SL	380	0.75~1.5	5	0.5	100/105/40	50/95/Φ4.5*6.5
2	YX82G2-10A-SL	380	2.2~4	10	0.55	185/105/60	50/95/Φ4.5*6.5
3	YX82G5D-20A-SL	380	5.5~7.5	20	1.6	185/105/60	167.8/85/Φ6.5*9.2
4	YX82G5D-36A-SL	380	11~15	36	1.8	185/105/60	167.8/85/Φ6.5*9.2
5	YX82G5D-50A-SL	380	18.5~22	50	1.7	185/105/60	167.8/85/Φ6.5*9.2
6	YX82G6D-65A-SL	380	30	65	6.2	310/170/107	280/142.5/Φ8.5*14
7	YX82G6D-80A-SL	380	37	80	6.2	310/170/107	280/142.5/Φ8.5*14
8	YX82G6D-100A-SL	380	45	100	6.5	310/170/107	280/142.5/Φ8.5*14
9	YX82G6D-120A-SL	380	55	150	6.5	310/170/107	280/142.5/Φ8.5*14
10	YX82G7D-150A-SL	380	75	200	9.2	352/185/112	325/151/Φ8.5*14
11	YX82G7D-200A-SL	380	93	250	-	352/185/112	325/151/Φ8.5*14
12	YX82G8D-300A-BL	380	110	300	11.5	380/220/155	228/195/Φ12
13	YX82G8D-400A-BL	380	200	400	11.6	380/220/155	228/195/Φ12
14	YX82G9D-630A-BL	380	280~315	630	18.5	448/255/162	290/230/Φ12

9-7.Brake unit and brake resistor

PI550-E frequency inverter 220V 0.4-11Kw, 380V 0.75-22Kw & 480v 0.75-22Kw with built-in brake unit, Please refer to the following table to select the brake resistance to match.220V 15kw to up, 380v 30kw to up & 480v 30Kw to up power should use additional brake unit, brake unit and brake resistor are listed below.

9-7-1 The braking voltage selection is based on the following two.

(1) select the braking unit corresponding to the voltage level according to the input voltage level of the frequency inverter

(2) select the braking unit of corresponding power according to the braking power required by the frequency inverter.

The principle of power selection of brake unit is that the power of the brake unit is greater than the braking power.In the case of uncertain braking power size, the following method can be used to estimate:

Pb=P*Td*K

Remark: Pb-----brake power ;

P-----motor power

K----- Mechanical energy conversion efficiency, generally 0.7.

Td---- The ratio of the braking torque to the rated moment of the motor.

Td values are different in different systems, as shown in the following table.

Common application	Elevator, hoist, crane.	Open and reel.	Large inertia equipment that requires fast parking.	Ordinary inertia load
Td value	100%	120%	120%	80%

9-7-2 Brake resistance selection.

When b`raking, the regenerative energy of the motor is almost entirely consumed on the brake resistor. According to the formula

U*U/R=Pb

Remark: U--- Braking voltage of stable braking system.

(different systems are also different, for the 220VAC system is generally 380V; For 380VAC system generally take 700V, for 480V system generally take 800V)

Note: Calculated when R is smaller than the smallest resistance under different voltage grade, you need to use multiple brake unit.

9-7-3 Power selection of brake resistance.

In theory, the power of the brake resistor is the same as the braking power, but the reduction is 70%.According to the formula

0.7*Pr=Pb*ED

Remark: Pr ----------Brake resistor power

ED---------- The braking frequency is the ratio of the braking process to the whole working process.

Common applilcation	ED value
Open and roll.	20%～30%
Accidental braking load	5%
elevator	20%～30%
Lifting machinery and centrifuges.	50%～60%
injection molding machine	5%～10%
General situations	10%

In the above table, the recommended braking unit and brake resistance value can meet the application conditions of various inverters with ED=0 ~ 100%, while the power of the braking resistance needs to be determined according to different application conditions.

9-7-4 The input voltage grade of frequency inverter is used for reference of specification and selection.

1, This table is the frequency converter 220V according to the braking unit dc working point of 350V, braking frequency ED=10%, braking torque is 100% selection reference.

Inverter power (kW)	Brake unit		Brake resistor (100% brake torque)	
	Model	QTY(pc)	specification	QTY(pc)
15	PB200-040-2	1	≥9Ω/2kW	1
18.5	PB200-040-2	1	≥9Ω/2kW	1
22	PB200-050-2	1	≥7Ω/3kW	1
30	PB200-075-2	1	≥5Ω/3kW	1
37	PB200-075-2	1	≥5Ω/4kW	1
45	PB200-100-2	1	≥4Ω/5kW	1
55	PB200-100-2	1	≥4Ω/6kW	1
75	PB200-100-2	2	≥4Ω/4kW	2
93	PB200-100-2	2	≥4Ω/5kW	2
110	PB200-100-2	3	≥4Ω/4kW	3
132	PB200-100-2	3	≥4Ω/5kW	3
160	PB200-100-2	3	≥4Ω/6kW	3

2, This table is a frequency converter 380V according to the braking unit dc working point is 670V, braking frequency is 10%, braking torque is 100% selection reference.

Inverter power (kW)	Brake unit		Brake resistor (100% brake torque)	
	Model	QTY(pc)	specification	Model
18.5	PB200-040-3	1	≥17Ω/2kW	1
22	PB200-040-3	1	≥17Ω/3kW	1
30	PB200-040-3	1	≥17Ω/3kW	1
37	PB200-040-3	1	≥17Ω/4kW	1
45	PB200-050-3	1	≥14Ω/5kW	1
55	PB200-075-3	1	≥9Ω/6kW	1
75	PB200-100-3	1	≥7Ω/8kW	1
93	PB200-100-3	1	≥7Ω/10kW	1
110	PB200-75-3	2	≥9Ω/6kW	2
132	PB200-75-3	2	≥9Ω/7kW	2
160	PB200-100-3	2	≥7Ω/9kW	2
200	PB200-100-3	2	≥7Ω/11kW	2
220	PB200-100-3	3	≥7Ω/8kW	3
250	PB200-100-3	3	≥7Ω/9kW	3
280	PB200-100-3	3	≥7Ω/10kW	3
315	PB200-100-3	4	≥7Ω/9kW	4
355	PB200-100-3	4	≥7Ω/10kW	4
400	PB200-100-3	4	≥7Ω/11kW	4

3. This table is a frequency converter 480V according to the braking unit dc working point of 760V, braking frequency 10%, braking torque is 100% selection reference.

Inverter power	Brake unit	Brake resistor(100% brake torque)

(kW)	Model	QTY(pc)	specification	Model
18.5	PB200-040-4	1	≥19Ω/2kW	1
22	PB200-040-4	1	≥19Ω/3kW	1
30	PB200-040-4	1	≥19Ω/3kW	1
37	PB200-040-4	1	≥19Ω/4kW	1
45	PB200-050-4	1	≥16Ω/5kW	1
55	PB200-075-4	1	≥11Ω/6kW	1
75	PB200-075-4	1	≥11Ω/8kW	1
93	PB200-100-4	1	≥8Ω/10kW	1
110	PB200-100-4	1	≥8Ω/12kW	1
132	PB200-075-4	2	≥11Ω/7kW	2
160	PB200-100-4	2	≥8Ω/9kW	2
200	PB200-100-4	2	≥8Ω/11kW	2
220	PB200-100-4	2	≥8Ω/12kW	2
250	PB200-100-4	3	≥8Ω/9kW	3
280	PB200-100-4	3	≥8Ω/10kW	3
315	PB200-100-4	3	≥8Ω/11kW	3
355	PB200-100-4	4	≥8Ω/10kW	4
400	PB200-100-4	4	≥8Ω/11kW	4

4.220v 11kW and the following models (built-in brake unit) brake resistance selection table is as follows:

Inverter voltage	Inverter power (kW)	Brake resistor(Ω)	Brake resistor power(W)
220V	5.5 kW	≥22Ω	≥800W
	7.5kW	≥16Ω	≥1000W
	11kW	≥11Ω	≥1500W

5.380V 22kW and the following models (brake unit built-in) brake resistance selection table is as follows:

Inverter voltage	Inverter power (kW)	Brake resistor(Ω)	Brake resistor power(W)
380V	0.75kW	≥300	≥230
	1.5kW	≥220	≥230
	2.2kW	≥200	≥250
	4kW	≥130	≥500
	5.5kW	≥90	≥600
	7.5kW	≥75	≥780
	11kW	≥50Ω	≥1200
	15kW	≥40Ω	≥1600
	18.5kW	≥25Ω	≥2000W
	22kW	≥22Ω	≥3000W

6.480V 22kW and the following models (built-in brake unit) brake resistance selection table is as follows:

Inverter	Inverter power (kW)	Brake resistor(Ω)	Brake resistor

voltage			power(W)
480V	0.75kW	≥300	≥230
	1.5kW	≥220	≥230
	2.2kW	≥200	≥250
	4kW	≥130	≥500
	5.5kW	≥90	≥600
	7.5kW	≥75	≥780
	11kW	≥50Ω	≥1200
	15kW	≥40Ω	≥1600
	18.5kW	≥25Ω	≥2000W
	22kW	≥22Ω	≥3000W

9-8.Main Circuit Breaker (MCCB), Contactor, Wire

9-8-1. Molded case circuit breaker (MCCB) or earth leakage circuit breaker (ELCB)

MCCB or ELCB as the power switch of the inverter also plays a protective role to the power supply. Note: Do not use MCCB or ELCB to control start/stop of the inverter. The capacity of the circuit breaker is 1.5~2 times the rated current of the inverter.

9-8-2.Contactor

It's used to cut off power supply to prevent the failure to be expanded when the protection function of the system is activated. The contactor can not be used to control the stop/start of the motor.

Model	breaker(A)	Input cable/output cable (Copper cable)mm2	Contactor rated working current A (voltage 380V or 220V)
015G3	63A	6	50
018G3	100A	10	63
022G3	100A	10	80
030G3	125A	16	95
037G3	160A	25	120
045G3	200A	35	135
055G3	250A	50	170
075G3	315A	70	230
093G3	400A	70	280
110G3	400A	95	315
132G3	400A	95	380
160G3	630A	150	450
200G3	630A	95x2	580
220G3	800A	150x2	630
250G3	800A	150x2	700
280G3	1000A	150x3	780
315G3	1200A	150x3	900
355G3	1280A	150x3	960
400G3	1600A	150x4	1035
450G3	1600A	185x3	1230

9-8-3.Cable

1.Power cables

The dimension of input power cable and motor cable should meet the local provision:

Input power cable and motor cable should bear the related load current.

The maximum rated temperature margin conditions of the motor cable should not be sustained below 70 degrees.

Conductivity of the PE conductor and phase conductor capacity are the same(same cross-sectional area),

About EMC requirements, see "EMC Guidance Content"

To meet the CE EMC requirements, a symmetrical shielded motor cable must be used (see figure below).For input cables can use four-core cable, but still recommended to use shielded symmetrical cable. Compared to a four-core cable, shielded symmetrical cables can not only reduce the loss and cost of the current flowing through the motor cable, but also can reduce the electromagnetic radiation.

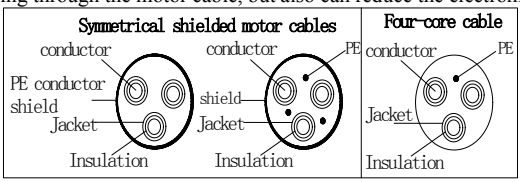

Note: If conductivity of the cable shield can not meet the requirements, you must use a separate PE conductor.

To play a protective role of conductor, when the shield wire and phase conductors using the same material, the cross-sectional area of the shield wire and phase conductors cross-sectional area must be the same, aims to reduce grounding resistance, impedance continuity better.

To effectively suppress RFI transmission and conduction, the shield conductivity must be at least 1/10 of the phase conductor conductivity. For copper or aluminum shield, this requirement is very easy to meet. Minimum requirements for the drive motor cable as shown below. Cable comprising a layer of copper spiral. Shield tight as possible, that the more tightly the more we can effectively suppress radiated electromagnetic interference.

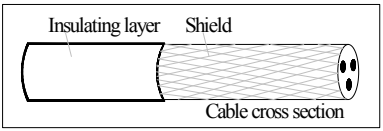

2. Control Cable

All analog control cables and cables for the frequency input must be shielded. Analog signal cable double-shielded twisted pair cable as shown in Figure 1. Each signal uses one pair individually shielded twisted pair cable pair. Do not use the different analog signal with a ground wire.

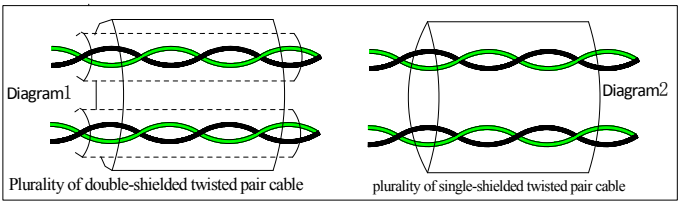

For low-voltage digital signals, double-shielded cable is the best choice, but can also be a single-shielded or unshielded twisted pair, as shown in Figure 2, however, the frequency of the signal, it can only use a shielded cable.

Relay cable need to use cables with metal braid shield.

Need to use a network cable to connect the keyboard, for electromagnetic environment is more complex place, it is recommended to use shielded cable.

Note: Analog and digital signals using different cables routed separately.

9-8-4 Interference countermeasures

The output side of the inverter is connected to the noise filter, which can reduce the inductive interference and radio interference.

Inductive interference: Electromagnetic induction makes the signal line contain noise, which causes the control device to malfunction.

Wireless interference: The high-frequency electromagnetic waves emitted by the frequency

inverter itself and the cable will interfere with the nearby radio equipment and make it emit noise during the process.

The output side installation noise filter is shown as below:

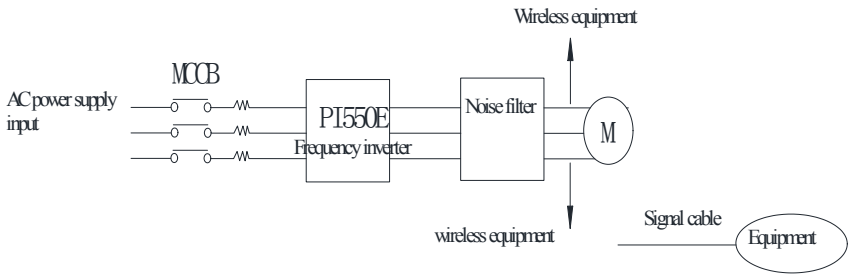

1) Inductive interference countermeasures: To suppress the inductive interference of the output side, besides the installation noise filter described above, the output connection can be used to pour all the output connections into the ground metal tube.The distance between the output line and the signal line is greater than 30cm, and the influence of inductive interference is also significantly reduced. the shown as below:

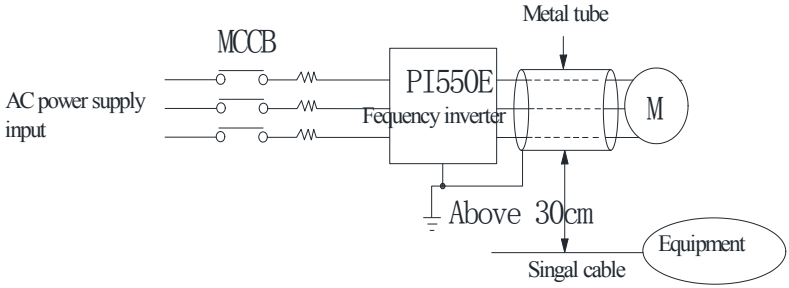

2) Radio frequency interference countermeasures: input and output cables and the inverter itself will produce radio frequency interference, are installed on both sides of input, output, noise filter, and shielding the inverter ontology with iron box, can reduce the radio frequency interference, the shown as below:

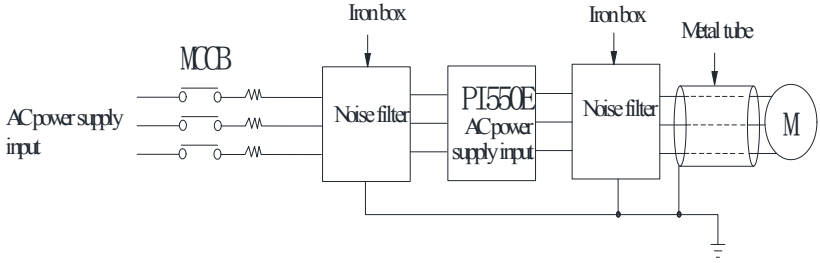

Chapter 10 Warranty

The product quality shall comply with the following provisions:

1. Warranty terms

1-1. The product from the user the date of purchase, the warranty period of 12 months (limited to domestic market).

1-2. Export products and non-standard products warranty period is 12 months or according to the agreement of warranty execution.

1-3. The product from the user the purchase date, guarantee to return, replacement, repair service, within one month after the date of shipment.

1-4. The product from the user the date of purchase, replacement, repair within three months after the date of shipment.

1-5. The product from the user the purchase date, enjoy lifelong compensable service.

2. Exceptions clause

If belongs to the quality problems caused by following reasons products, not within the warranty.

2-1. The user is not in accordance with the "products manual" is used method of operation caused the failure.

2-2. Users without permission to repair or alteration caused by product failure.

2-3. Users beyond the standard specifications require the use of the inverter caused by product failure.

2-4. Users to buy and then fell loss or damage caused by improper handling.

2-5. Because the user use environment device caused by aging lead to product failure.

2-6. Due to the fault cause of earthquake, fire, lightning, wind or water disaster, abnormal voltage irresistible natural disasters.

2-7. Damaged during shipping (Note: The transport mode specified by the customer, the company to assist to handle cargo transfer procedures).

3. The following conditions, manufacturers have the right not to be warranty

3-1. No product nameplate or product nameplate blurred beyond recognition.

3-2. Not according to the purchase contract agreement to pay the money.

3-3. For installation, wiring, operation, maintenance and other users can not describe the objective reality to the company's technical service center.

4. In return, replacement, repair service, shall be returned the company, confirmed the attribution of responsibility, can be returned or repair

5, All maintenance charges are subject to the latest price list of our company.

6.When the product fails, please fill in the contents of the product warranty card correctly and send it to us with the fault machine.

7.The interpretation of this clause is vested in dalian putra technology co., LTD.

Appendix I RS485 Communication protocol

I-1 Communication protocol

I-1-1 Communication content

This serial communication protocol defines the transmission information and use format in the series communication Including: Master polling(or broadcast) format; master encoding method, and contents including: Function code of action, transferring data and error checking. The response of slave also adopts the same structure, and contents including: Action confirmation, returning the data and error checking etc. If slave takes place the error while it is receiving information or cannot finish the action demanded by master, it will send one fault signal to master as a response.

Application Method

The inverter will be connected into a “Single-master Multi-slave” PC/PLC control network with RS485 bus.

Bus structure

(1)Transmission mode

Asynchronous series and half-duplex transmission mode. For master and slave, only one of them can send the data and the other only receives the data at the same time. In the series asynchronous communication, the data is sent out frame by frame in the form of message

(2)Topological structure

Single-master and multi-slave system. The setting range of slave address is 0 to 247, and 0 refers to broadcast communication address. The address of slave for network must be exclusive.

Figure I-3 is the single inverter and PC set up MODBUS field wiring diagram. Because computers are generally not with RS485 interface, the computer must be built-in RS232 interface or USB interface through the converter to convert to RS485. Connect the T + of converter with 485 + terminal of the inverter, Connect the T- of converter with 485- terminal of inverter. We recommended to use a shielded twisted pair. When adopting the RS232-485 converter,RS232 interface connected with RS232-RS485 RS232 interface, the cable should be as short as possible,15meters at the longest, we recommend to plug the RS232-RS485 with computer in pair directly. Similarly, when using the USB-RS485 converter, cable should be as short as possible.

When the line is connected, connect the right port of the host computer on the computer to (RS232-RS485 converter port, such as COM1), and set the basic parameters and the baud rate and data bit parity and so on consistent with the inverter.

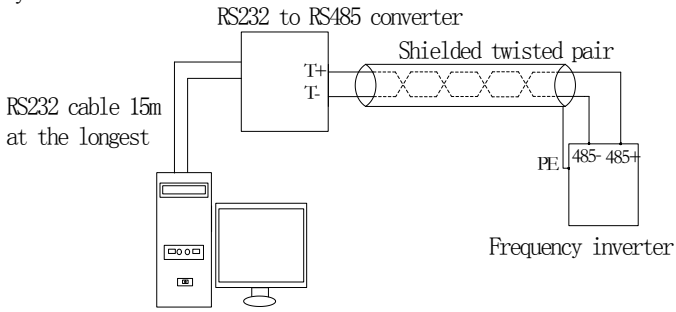

Figure I-3

Multiple Applications

In reality, multi-machine applications, there are two connections

The first inverter and the last inverter short the terminal resistor on the control board to be active. As shown in Figure I-4

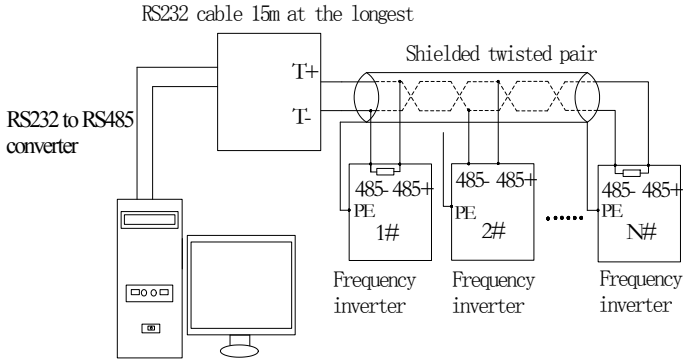

Figure I-4

The two longest distance inverter from the device shall short the terminal resistor on the control board to be active. As shown in Figure I-5:

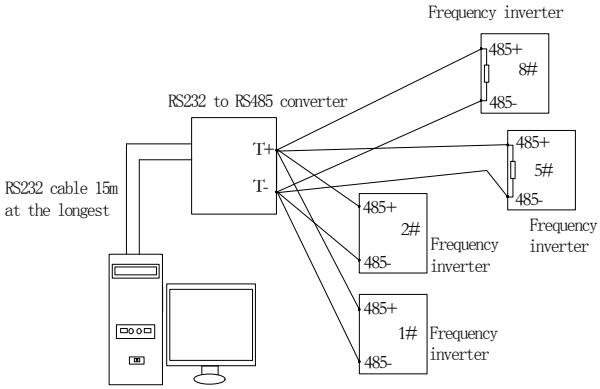

Figure I-5

Multi-machine connection should try to use a shielded cable. The basic parameters such as baud rate and data bit of all of the devices on RS485 line must be the same, address must be different.

NOTE: The terminal resistor of 485 decides valid or invalid through the control board (No. 485) jumper

I-1-2 Protocol description

PI550-E series inverter communication protocol is a asynchronous serial master-slave communication protocol, in the network, only one equipment(master) can build a protocol (known as “Inquiry/Command”). Other equipment(slave) only can response the "Inquiry/Command"of master by providing data or perform the corresponding action according to the "Inquiry/Command"of master. Here, the master refers to a Personnel Computer(PC), an industrial control device or a programmable logic controller (PLC), etc. and the slave refers to PI550-E inverter. Master can communicate with individUal slave, also send broadcasting information to all the lower slaves. For the single "Inquiry/Command"of master, slave will return a signal(that is a response) to master; for the broadcasting information sent by master, slave does not need to feedback a response to master.

Communication data structure PI550 –E series inverter's Modbus protocol communication data format is as follows: in RTU mode, messages are sent at a silent interval of at least 3.5 characters. There are diverse character intervals under network baud rate, which is easiest implemented. The first field transmitted is the device address.

The allowable characters for transmitting are hexadecimal 0 ... 9, A ... F. The networked devices continuously monitor network bus, including during the silent intervals. When the first field (the address field) is received, each device decodes it to find out if it is sent to their own. Following the last transmitted character, a silent interval of at least 3.5 characters marks the end of the message. A new message can begin after this silent interval.

The entire message frame must be transmitted as a continuous stream. If a silent interval of more than 1.5 characters occurs before completion of the frame, the receiving device will flushes the incomplete message and assumes that the next byte will be the address field of a new message. Similarly, if a new message begins earlier than the interval of 3.5 characters following a previous message, the receiving device will consider it as a continuation of the previous message. This will result in an error, because the value in the final CRC field is not right.

RTUframe format :

Frame header START	Time interval of 3.5characters
Slave address ADR	Communication address: 1 to 247
Command code CMD	03: Read slave parameters;06: write slave parameters
Data content DATA(N-1)	Data content: Address of function code parameter, numbers of function code parameter, value of function code parameter, etc.
Data content DATA(N-2)	
……	
Data content DATA0	
CRC CHK high-order	Detection Value: CRC value.
CRC CHK low-order	
END	Time interval of 3.5characters

CMD (Command) and DATA (data word description)

Command code: 03H, reads N words (Max.12 words), for example: For the inverter with slave address 01, its start address F0.02 continuously reads two values.

Master command information

ADR	01H
CMD	03H
Start address high-order	F0H
Start address low-order	02H
Number of registers high-order	00H
Number of registers low-order	02H
CRC CHK low-order	CRC CHK values are to be calculated
CRC CHK high-order	

Slave responding information

When F9.05 is set to 0:

ADR	01H
CMD	03H
Byte number high-order	00H
Byte number low-order	04H
Data F002H high-order	00H
Data F002H low-order	01H
Data F003H high-order	00H
Data F003H low-order	01H
CRC CHK low-order	CRC CHK values are to be calculated
CRC CHK high-order	

When F9.05is set to 1:

ADR	01H
CMD	03H
Byte number	04H

Data F002H high-order	00H
Data F002H low-order	01H
Data F003H high-order	00H
Data F003H low-order	01H
CRC CHK low-order	CRC CHK values are to be calculated
CRC CHK high-order	

Command Code: 06H, write a word. For example: Write 5000(1388H)into the address F013H of the inverter with slave address 02H.

Master command information

ADR	02H
CMD	06H
Data address high-order	F0H
Data address low-order	13H
Data content high-order	13H
Data content low-order	88H
CRC CHK low-order	CRC CHK values are to be calculated
CRC CHK high-order	

Slave responding information

ADR	02H
CMD	06H
Data address high-order	F0H
Data address low-order	13H
Data content high-order	13H
Data content low-order	88H
CRC CHK low-order	CRC CHK values are to be calculated
CRC CHK high-order	

I-2 Check mode:

Check mode - CRC mode: CRC (Cyclical Redundancy Check) adopts RTU frame format, the message includes an error-checking field that is based on CRC method. The CRC field checks the whole content of message. The CRC field has two bytes containing a 16-bit binary value. The CRC value calculated by the transmitting device will be added into to the message. The receiving device recalculates the value of the received CRC, and compares the calculated value to the Actual value of the received CRC field, if the two values are not equal, then there is an error in the transmission.

The CRC firstly stores 0xFFFF and then calls for a process to deal with the successive eight-bit bytes in message and the value of the current register. Only the 8-bit data in each character is valid to the CRC, the start bit and stop bit, and parity bit are invalid.

During generation of the CRC, each eight-bit character is exclusive OR(XOR) with the register contents separately, the result moves to the direction of least significant bit(LSB), and the most significant bit(MSB) is filled with 0. LSB will be picked up for detection, if LSB is 1, the register will be XOR with the preset value separately, if LSB is 0, then no XOR takes place. The whole process is repeated eight times. After the last bit (eighth) is completed, the next eight-bit byte will be XOR with the register's current value separately again. The final value of the register is the CRC value that all the bytes of the message have been applied.

When the CRC is appended to the message, the low byte is appended firstly, followed by the high byte. CRC simple functions is as follows:

```
unsigned int crc_chk_value(unsigned char *data_value,unsigned char length)
{
        unsigned int crc_value=0xFFFF;
```

```
        int i;
        while(length--)
        {
            crc_value^=*data_value++;
            for(i=0;i<8;i++)
            {
                if(Crc_value&0x0001)
                {
                  crc_value=(C rc_value>>1)^0xa001;
                }
                else
                {
                  crc_value=crc_value>>1;
                }
            }
        }
        return(Crc_value);
    }
```

I-3 Definition of communication parameter address

The section is about communication contents, it's used to control the operation, status and related parameter settings of the inverter. Read and write function-code parameters (Some functional code is not changed, only for the manufacturer use or monitoring): The rules of labeling function code parameters address:

The group number and label number of function code is used to indicate the parameter address:

High byte: F0 to FB (F group), A0 to AF (E group), B0 to BF(B group),C0 to C7(Y group),70 to 7F (d group) low byte: 00 to FF

For example: Address F3.12 indicates F30C; Note: L0 group parameters: N either read nor change; d group parameters: Only read, not change.

Some parameters can not be changed during operation, but some parameters can not be changed regardless of the inverter is in what state.When changing the function code parameters, please pay attention to the scope, units, and relative instructions on the parameter.

Besides, due to EEPROM is frequently stored, it will redUce the life of EEPROM, therefore under the communication mode some function code do not need to be stored and you just change the RAM value.

If F group parameters need to achieve the function, as long as change high order F of the function code address to 0. If E group parameters need to achieve the function, as long as change high order F of the function code address to 4. The corresponding function code addresses are indicated below: High byte: 00 to 0F(F group), 40 to 4F (E group), 50 to 5F(B group),60 to 67(Y group)low byte:00 to FF

For example:

Function code F3.12 can not be stored into EEPROM, address indicates as 030C; function code E3.05 can not be stored into EEPROM, address indicates as 4305; the address indicates that only writing RAM can be done and reading can not be done, when reading, it is invalid address. For all parameters, you can also use the command code 07H to achieve the function.

Stop/Run parameters section:

Parameter address	Parameter description	Parameter address	Parameter description
1000	*Communication set value(-	1011	PID feedback

	10000 to10000)(Decimal)		
1001	Running frequency	1012	PLC step
1002	Bus voltage	1013	High-speed pulse input frequency, unit: 0.01kHz
1003	Output voltage	1014	Feedback speed, unit:0.1Hz
1004	Output current	1015	Remaining run time
1005	Output power	1016	AI1 voltage before correction
1006	Output torque	1017	AI2 voltage before correction
1007	Operating speed	1018	Reserve
1008	DI input flag	1019	Linear speed
1009	DO output flag	101A	Current power-on time
100A	AI1 voltage	101B	Current run time
100B	AI2 voltage	101C	High-speed pulse input frequency, unit: 1Hz
100C	AI3 voltage	101D	Communication set value
100D	Count value input	101E	Actual feedback speed
100E	Length value input	101F	Master frequency display
100F	Load speed	1020	Auxiliary frequency display
1010	PID setting		

Note:

There is two ways to modify the settings frequencies through communication mode:

The first: Set F0.03 (main frequency source setting) as 0/1 (keyboard set frequency), and then modify the settings frequency by modifying F0.01 (keyboard set frequency). Communication mapping address of F0.01 is 0xF001 (Only need to change the RAM communication mapping address to 0x0001).

The second :Set F0.03 (main frequency source setting) as 9 (Remote communication set), and then modify the settings frequency by modifying (Communication settings). , mailing address of this parameter is 0x1000.The communication set value is the percentage of the relative value, 10000 corresponds to 100.00%, -10000 corresponds to -100.00%. For frequency dimension data, it is the percentage of the maximum frequency (F0.19); for torque dimension data, the percentage is F5.08 (torque upper limit digital setting).

Control command is input to the inverter: (write only)

Command word address	Command function	
2000	0001: Forward run	0005: Free stop
	0002: Reverse run	0006: Deceleration and stop
	0003: Forward Jog	0007: Fault reset
	0004: Reverse Jog	

Inverter read status: (read-only)

Status word address	Status word function
3000	0001: Forward run
	0002: Reverse run
	0003: Stop

Parameter lock password verification: (If the return code is 8888H, it indicates that password verification is passed)

Password address	Enter password
C000	*****

Digital output terminal control: (write only)

Command address	Command content
2001	BIT0: SPA output control BIT1: RELAY2 output control

	BIT2 RELAY1 output control BIT3: Manufacturer reserves the undefined BIT4: SPB switching quantity output control

Analog output DA1 control: (write only)

Command address	Command content
2002	0 to 7FFF indicates 0% to 100%

Analog output DA2 control: (write only)

Command address	Command content
2003	0 to 7FFF indicates 0% to 100%

SPB high-speed pulse output control: (write only)

Command address	Command content
2004	0 to 7FFF indicates 0% to 100%

Inverter fault description:

Inverter fault address:	Inverter fault information:
8000	0000: No fault 0001: Inverter unit protection 0002: Acceleration over-current 0003: Deceleration over-current 0004: Constant speed over-current 0005: Acceleration overvoltage 0006: Deceleration overvoltage 0007: Constant speed overvoltage 0008: Control power failure 0009: Under-voltage fault 000A: Inverter overload 000B: Motor Overload 000C: Input phase loss 000D: Output phase loss 000E: Module overheating 000F: External fault 0010: Communication abnormal 0011: Contactor abnormal 0012: Current detection fault 0013: Motor parameter auto tunning fault 0014:Encoder/PG card abnormal 0015: Parameter read and write abnormal 0016: Inverter hardware fault 0017: Motor short to ground fault 0018: Reserved 0019: Reserved 001A:Running time arrival 001B: Custom fault 1 001C: Custom fault 2 001D: Power-on time arrival 001E: Load drop 001F: PID feedback loss when running 0028: Fast current limiting timeout 0029: Switch motor when running fault 002A: Too large speed deviation 002B: Motor over-speed 002D: Motor over-temperature

	005A: Encoder lines setting error 005B: Missed encoder 005C: Initial position error 005E: Speed feedback error

Data on communication failure information description (fault code):

Communication fault address	Fault function description
8001	0000: No fault 0001: Password error 0002: Command code error 0003: CRC check error 0004: Invalid address 0005: Invalid parameters 0006: Invalid parameter changes 0007: System locked 0008: EEPROM in operation

F9Group - Communication parameter description

F9.00	Baud rate	Default	6005
	Setting range	Units digit: MODUBUS baud rate 0~1:Reserve 2: 1200bps 3: 2400bps 4: 4800bps 5: 9600bps 6: 19200bps 7: 38400bps 8: 57600bps 9: 115200bps	
		decade digit: Profibus-DP 0:115200bps	
		hundred digit: Reserve 0:reserve	
		kilobit: CAN Bus baud rate 6: 1M	

This parameter is used to set the data transfer rate between the host computer and the inverter. Note: The baud rate must be set to the same for the host computer and the inverter, otherwise communication can not be achieved. The larger baud rate, the faster communication speed.

F9.01	Data format	Default	0
	Setting range	0: No parity: Data format <8, N, 2> 1: Even parity: Data format <8, E, 1> 2: Odd parity: Data format <8, O, 1> 3: No parity: Data format <8-N-1>	

Note: The set data for the host computer and the inverter must be the same.

F9.02	This unit addres	Default	1
	Setting range	1 to 247, 0for broadcast address	

When the address of this unit is set 0, that is broadcast address, the broadcasting function for the host computer can be achieved.

The address of this unit has uniqueness (in addition to the broadcast address), which is the basis of peer-to-peer communication for the host computer and the inverter.

F9.03	Response latency	The factory value	2ms
	Set the range	0～20ms	

Response time delay: Refers to the interval time between the data receiving end of the frequency converter and the sending data of the upward plane.If the response time delay is less than the system processing time, the response time delay will be subject to system processing time, processing time, such as response time delay is longer than system after processing the data, the system will delay waiting, until the response delay time to up to a machine to send data.

F9.04	Communication timeout	The factory value	0.0 s
	Set the range	0.0s(invalid);0.1~60.0s	

When the function code is set to 0.0s, the communication timeout parameter is invalid.

When the function code is set to the valid value, if the interval between one communication and the next communication exceeds the communication timeout period, the system will report a communication failure error (fault serial number Err.16).Usually, it is set to invalid.If the secondary parameters are set in a continuous communication system, the communication status can be monitored.

F9.05	Communication protocol selection	The factory value	1
	Set the range	0:Non-standard Modbus protocol; 1. Standard Modbus protocol.	

F9.05=1: Select the standard Modbus protocol.

F9.05=0: when reading commands, the number of bytes returned from the machine is one byte more than the standard Modbus protocol.

F9.06	Communication reads current resolution.	The factory value	0
	Set the range	0:0.01A 1: 0.1A	

Used to determine the output unit of the current when the communication reads the output current.

Appendix II How to use universal encoder expansion card

II-1 Overview

PI550 - E is equipped with a variety of general encoder expansion card (Compatible with PI9000 PG card), used as options, is made of closed-loop vector control frequency converter will be options, select the PG card according to the encoder output form,, the specific models are as follows:

Options	Description	Others
PI9000_PG 1	ABZ incremental encoder: Differential input PG card, without frequency dividing output. OC input PG card, without frequency dividing output.5V,12V,24V voltage is optional, please provide voltage and pulse input mode information when ordering.	Terminal wiring
PI9000_PG 3	UVW incremental encoder. UVW Differential input PG card, without frequency dividing output.5V voltage	Terminal wiring
PI9000_PG 4	Rotational transformer PG card	Terminal wiring
PI9000_PG 5	ABZ incremental encoder. OC input PG card, with 1:1 frequency dividing output. 5V,12V,24V voltage is optional, please provide voltage and pulse input mode information when ordering.	Terminal wiring

II-2 Description of mechanical installation and control terminals function

The expansion card specifications and terminal signals for each encoder are defined as follows:

Table 1 Definitions of specifications and terminal signals

Differential PG card(PI9000_PG1)					
PI9000_PG1 specifications					
User interface			Terminal block		
Spacing			3.5mm		
Screw			Slotted		
Swappable			NO		
Wire gauge			16-26AWG(1.318~0.1281mm²)		
Maximum frequency			500kHz		
Input differential signal amplitude			≤7V		
PI9000_PG1 terminal signals					
No.	Label no.	Description	No.	Label no.	Description
1	A+	Encoder output A signal positive	6	Z-	Encoder output Z signal negative
2	A-	Encoder output A signal negative	7	5V	Provide 5V/100mA power
3	B+	Encoder output B signal positive	8	GND	Power ground
4	B-	Encoder output B signal negative	9	PE	Shielding terminal
5	Z+	Encoder output Z signal positive			
UVW differential PG card					
PI9000_PG3 specifications					
User interface			Terminal block		

Swappable	NO
Wire gauge	>22AWG(0.3247mm²)
Maximum frequency	500kHz
Input differential signal amplitude	≤7V

PI9000_PG3 terminal description

Item No.	Label no.	Description	Item No.	Label no.	Description
1	A+	Encoder output A signal positive	9	V+	Encoder output V signal positive
2	A-	Encoder output A signal negative	10	V-	Encoder output V signal negative
3	B+	Encoder output B signal positive	11	W+	Encoder output W signal positive
4	B-	Encoder output B signal negative	12	W-	Encoder output W signal negative
5	Z+	Encoder output Z signal positive	13	+5V	Output 15V/100mA power
6	Z-	Encoder output Z signal negative	14	GND	Power ground
7	U+	Encoder output U signal positive	15	-	
8	U-	Encoder output U signal negative			

Rotational transformer PG card(PI9000_ PG4)

PI9000_PG4 specifications

User interface	Terminal block
Swappable	NO
Wire gauge	>22AWG(0.3247mm²)
Resolution	12-bit
Excitation frequency	10kHz
VRMS	7V
VP-P	3.15±27%

PI9000_PG4 terminal description

No.	Label no.	Description	No.	Label no.	Description
1	EXC1	Rotary transformer excitation negative	4	SINLO	Rotary transformer feedback SIN negative
2	EXC	Rotary transformer excitation positive	5	COS	Rotary transformer feedback COS positive
3	SIN	Rotary transformer feedback SIN positive	6	COSLO	Rotary transformer feedback COS negative

OC PG card(PI9000_PG5)

PI9000_PG5 specifications

User interface	Terminal block
Spacing	3.5mm
Screw	Slotted
Swappable	NO
Wire gauge	16-26AWG(1.318~0.1281mm²)
Maximum frequency	100KHz

PI9000_PG5 terminal description

No.	Label no.	Description	No.	Label no.	Description
1	A	Encoder output A signal	6	A0	PG card 1:1 feedback output A signal
2	B	Encoder output B signal	7	B0	PG card 1:1 feedback output B signal
3	Z	Encoder output Z signal	8	Z0	PG card 1:1 feedback output Z signal
4	15V	Output 15V/100mA power	9	PE	Shielding terminal
5	GND	Power ground			

Appendix III CAN bus communication card use description

III-1.Overview

CAN bus communication card is suitable for all series of PI550-E frequency inverters.Protocol details please refer to《CAN bus communication protocol》document.

III-2.Mechanical installation and terminal functions

III-2-1 Mechanical installation modes:

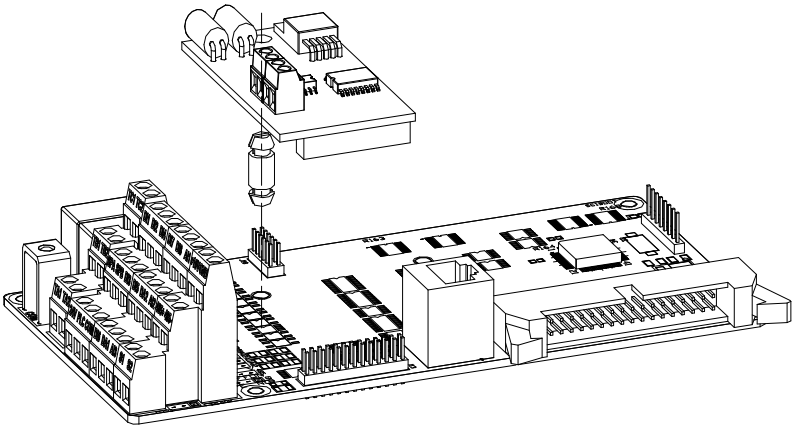

Figure III-1: CAN bus communication card's installation on SCB

III-2-2 Terminal function

Class	Terminal Symbol	Terminal Name	Description
Communication	CANH	communication interface terminal	CAN communication input terminal
	CANL		
	COM	CAN communication power ground	CAN 5V power output terminal
	P5V	CAN communication power output ground	

Appendix IV: Instruction of Profibus –DP communication card

IV-1.Outline

9KDP1 meet the international standard PROFIBUS fieldbus, powtran technology PI550-E series inverter use it together to achieve the drive to become a part of fieldbus complete control of real fieldbus. Before using this product, please carefully read this manual

IV-2 Terminal function

IV-2-1 DIP switch description

Switch position No.	Function	Instruction		
1,2	DP Card and the drive baud rate selection	Bit 1	Bit 2	Baud Rate
		OFF	OFF	115.2K
		OFF	ON	208.3K
		ON	OFF	256K
		ON	ON	512K
3-8	Profibus-DP Communication from the station address	6 Binary Consisting of 64-bit binary address, more than 64 outside the address can be set only by function code. The following lists some slave address and switch settings Address switch settings 0 00 0000 7 00 0111 20 01 0100		

Table IV-1: Switch Functions

IV-2-2 Terminal Function

1) External communication terminal J4-6PIN

Terminal NO	Mark	Function	Terminal NO	Logo	Function
1	GND	5V power ground	4	TR+	Cable Positive
2	RTS	Request to send signal	5	+5V	5Vpower
3	TR-	Cable negative	6	E	The grounding end

Table V-2: External communication terminal function

2) Upper machine communication interface SW1-8PIN

Terminal No	Terminal logo	Function	Terminal No	Terminal logo	Function
1	BOOT0	ARM boot selection	5	PC232T	PC 232 communication Sending side
2	GND	Power ground	6	PC232R	PC 232 communication receiving side
3	VCC	Power	7	RREST	ARM reset

4	Reserved	Reserve	8	GND	Power ground

Table IV-3: PC communication terminal function

IV-2-3 LED Light function

LED light	Function definition	Description
Green	Power light	If DP card and drive interfaces connected, the inverter after power LED should be in the steady state
Red	DP CARDS and frequency converter serial port connect light	DP Card and inverter connected to the normal state of the LED is lit, flashing indicates the connection is intermittent (for interference), and drive off when a serial connection is unsuccessful (You can check the baud rate setting)
Yellow	DP card and Profibusmain connection indicator light	DP Profibus master card and connect normal state of the indicator is lit. flashing indicates the connection is intermittent (for interference), and Profibus master is off when connection is unsuccessful (you can check the slave address, data formats, and Profibus cable)

Table IV-4: LED light function description

Product information feedback

Dear user:

Thank you for your interest in and purchasing Powtran products! In order to better serve you, we want to be able to timely get your personal information and the related information of the purchased Powtran products so as to understand your further demands for our Powtran products, we would appreciate your valuable feedback. For your convenience, please visit our website https://www.powtran.com and then click "Technologies and Services"and "Download" columns to submit your feedback information.

1) Download the update product manUals you need

2) View the technical information on products, such as operation instructions, specifications and features, FAQ, etc.

3) Share application cases.

4) Technical advisory and online feedback

5) Feedback the product and demand information via e-mail

6) Inquire the latest products and access to various types of warranty and extend additional services

A manufacturer of motor control intelligent products and devices based on motor design.

✆ 400-0411-755

P1550-E English Manual V1.0